Rolling Service Door Systems

PRODUCT LINE		MODELS
	NON-INSULATED DOORS	600/610/620
	INSULATED DOORS	625/627

OVERHEAD DOOR®

INDUSTRY LEADING
COMMERCIAL & INDUSTRIAL SOLUTIONS

General features and benefits

A comprehensive line of Rolling Service Doors

- Galvanized steel, stainless steel and aluminum doors in a variety of gauges, slat profiles, finishes and options
- Standard door widths up to 30'4" (9246 mm) and 28'4" (8636 mm) in height, and custom door sizes up to 1500 sq. ft. (139,355 sq.mm)[Δ]

Solid, reliable construction for the long term

- Guide designed to ensure smooth curtain operation
- Steel brackets provide additional strength
- Helical torsion springs designed for 20,000 cycles, with high usage up to 100,000 cycles
- Wind load options to meet specifications

A host of standard features and available options

- Curved or flat slats in a range of sizes and profiles, including the C-600, a curved slat profile for heavy-duty applications that is 6" (152 mm) in height and 1 3/8" in depth
- Finishes include primed and painted steel, PowderGuard® Premium, PowderGuard® Zinc and PowderGuard® Max powder coat in approximately 200 colors or color-matched to specification, as well as clear or bronze anodized aluminum
- Face-of-wall mounting is standard with between-jambs mounting available on most models
- Push-up, chain-hoist, crank or motor operation available
- Electric motor option with an array of remote controls, as well as other accessories, simplifies door operation
- Ventilated slats with perforations or fenestrations extend applications to open-air environments (Model 610 only)
- High-usage package, sloped bottom bars and pedestrian pass doors
- Insulated slats (Models 625 and 627) and perimeter seal protection options (weather baffle, lintel seal, guide weather seals, bottom astragal) offer additional protection against air infiltration
- ICC-ES listed air infiltration option (Models 625 and 627) that meets code requirements (2012 C402.4.3/2015 C402.5.2) of air infiltration rating lower than 1.0 cfm/ft² for rolling steel doors
  Package includes:
  – Guide cover and cap
  – Enhanced guide seal
  – Lintel seal
  – Bottom astragal

Cover image: *Model 625, 10" by 1" fenestrations*

Image above: *Model 610, alternating slats with perforation*

[Δ] Maximum height and width are independent of each other and may vary based on slat profile, material and gauge.

Slat styles

A variety of profiles, finishes, materials and options

We offer a broad range of rolling service door curtains to satisfy any number of project requirements. Rolling Service Doors are available with a variety of slat profiles, materials, gauges and finishes.

Slats for special applications

Our insulated Stormtite™ doors feature flat slat profiles with CFC-free insulation that provides protection against air infiltration. An optional IECC compliance package for air infiltration is also available for Stormtite™ Model 625 and Stormtite™ AP Model 627. For special, oversize, heavy-duty, non-insulated applications, we offer the C-600 slat – a curved slat profile that measures 6" (152 mm) in height and 1 3/8" in depth. The F-265 and C-275 slat profiles are also available with perforation or fenestration for applications where ventilation is required. Perforated slats feature 1/16" (2 mm) diameter holes on 3/32" (2 mm) centers, and are fabricated of 18 gauge galvanized steel with a durable, baked-on Gray paint finish. Fenestrated slats feature uniformly spaced openings for air flow and light infiltration. 3"x 5/8" fenestrations are available on the C-275, C-187*, and F-265 slat profiles. 10"x1" fenestrations are available on the F-265 and FIT-265 slat profiles. Doors can be constructed entirely of perforated or fenestrated slats, or these special slats can be used selectively to provide air flow and light infiltration as required.

*C-187 fenestrated slats cannot be used for completely fenestrated doors.

CAW Slat

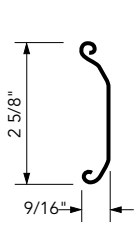

C-187 Slat

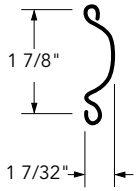

C-275 Slat

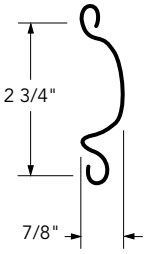

C-600 Slat

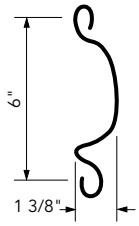

F-265 and FE-265 Slats

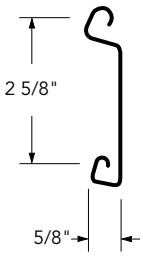

F-265i Slat

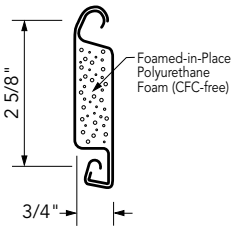

FIT-265 slat

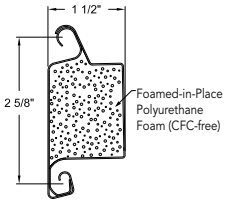

Fenestrated slat close-up view

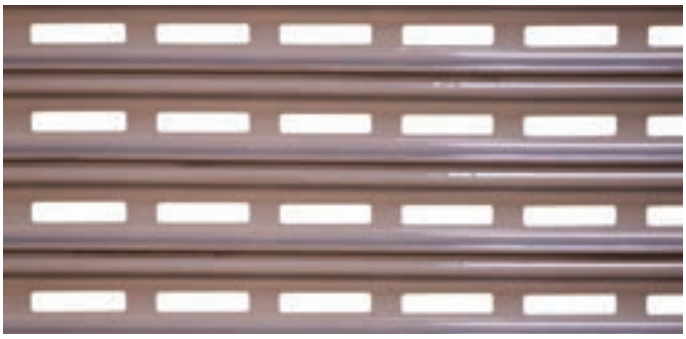

Curved slat with 3" by 5/8" fenestration

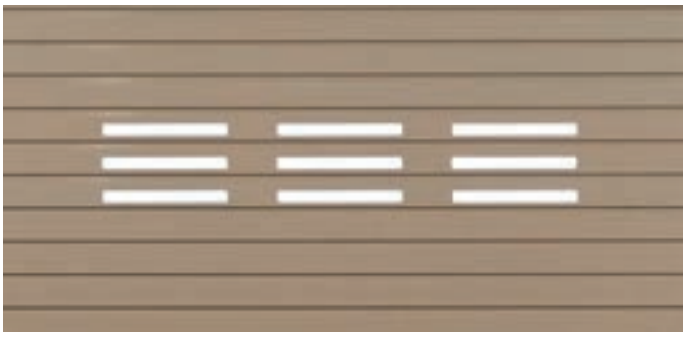

F265 with 10" by 1" fenestration

Color options

Steel slats are finished with a rust-inhibitive, roll-coating process that incorporates baked-on prime paint and a baked-on polyester top coat that comes standard in Gray, Tan, White or Brown. C-600 is available in Gray only.

PowderGuard® Premium powder coat finish options are available in approximately 200 colors as well as custom matching to architect specification. PowderGuard® Textured finish, a thicker, industrial textured powder coat, is available in 11 colors providing enhanced scratch resistance as well as aiding in hiding the dirt and blemishes that often occur in commercial environments. PowderGuard® Zinc is also available as a base coat to provide extra corrosion protection or upgrade your Premium PowderGuard® to PowderGuard® Max which is four times harder for enhanced durability.

Model 625, powder coat finish.

The breadth of the Overhead Door™ Rolling Service Door product line ensures that your project specifications will be met with ease and style. Ideal for situations where sideroom and headroom are at a premium, our upward-coiling service doors fit openings up to 1500 sq. ft. (139,355 sq.mm) and are available with a wide array of slat profiles, curtain materials and colors, offering a virtually endless array of options to satisfy both aesthetic considerations and working requirements. Fabricated of interlocking steel, stainless steel or aluminum curtains in a variety of slat profiles, finishes and options, our doors are designed for durability, serviceability and good looks.

Model 625, F265i slat

General specifications for ROLLING SERVICE DOORS						
Model	627 Stormtite™ Insulated	625 Stormtite™ Insulated	620 Stormtite™	610 with C-600 Slat	610	600 Coil-Away™
Maximum standard width[Δ]	30'4" (9246 mm)	30'4" (9246 mm)	30'4" (9246 mm)	65' (19812 mm)	30'4" (9246 mm)	16' (4877 mm)
Maximum standard height[Δ]	19'4" (5893 mm)	28'4" (8636 mm)	28'4" (8636 mm)	30' (9144 mm)	28'4" (8636 mm)	16' (4877 mm)
Maximum size	550 sq ft* (51,097 sq.mm)	900 sq ft* (83,613 sq.mm)	900 sq ft* (83,613 sq.mm)	1500 sq ft* (139,355 sq.mm)	900 sq ft* (83,613 sq.mm)	256 sq ft* (23,783 sq.mm)
Standard mounting	face-of-wall	face-of-wall	face-of-wall	face-of-wall	face-of-wall	face-of-wall
Standard operation	chain hoist	chain hoist	push up	motor	push up	push up
Curtain material						
Standard	galvanized steel front & back	galvanized steel front & back*	galvanized steel	galvanized steel	galvanized steel	galvanized steel
Optional	stainless steel/ aluminum	stainless steel/ aluminum	stainless steel/ aluminum		stainless steel/ aluminum	
Slat profile type						
Standard	FIT-265	F-265i	F-265	C-600	C-187	CAW
Optional					C-275/F-265	
Wind load	20 psf	20 psf	20 psf	20 psf	20 psf	optional
R-value**	10.9	7.7				
Standard finish	primed paint	primed paint	primed paint	primed paint	primed paint	primed paint
Color	Gray/Tan/ White/Brown	Gray/Tan/ White/Brown	Gray/Tan/ White/Brown	Gray	Gray/Tan/ White/Brown	White-White Brown-White White-Brown
Hood	●	●	●	●	●	optional
Internal hood baffle	●	●	●			
Guide weather seal	● 2-sided	● 1-sided; 2-sided optional	● 1-sided; 2-sided optional	● 1or 2-sided optional	● 1or 2-sided optional	
Lock	slide bolt	slide bolt	slide bolt		slide bolt	slide bolt

* Consult factory for larger sizes.
** Overhead Door Corporation uses a calculated door section R-value for our insulated doors.
Δ Maximum height and width are independent of each other and may vary based on slat profile, material and gauge.

Available options for ROLLING SERVICE DOORS						
Model	627 Stormtite™ Insulated	625 Stormtite™ Insulated	620 Stormtite™	610 with C-600 Slat	610	600 Coil-Away™
Electric operator	●	●	●	●	●	●
High-usage package	●	●	●		●	
Pedestrian pass door	●	●	●		●	
Exhaust ports	●	●	●		●	
Weatherstripping						
Bottom bar	●	●	●	●	●	●
Exterior curtain-side guide	●	●	●	●	●	
Interior curtain-side guide	●	●	●	●	●	
Lintel Seal	●	●	●	●	●	●
IECC compliance package for air infiltration	●	●				
High-wind load package	●	●	●	Consult factory	●	●
Ventilated/ fenestrated slats					●	
Vision lites	●	●	●		●	
Between-jamb mounting	●	●	●	●	●	●
Galvanized steel bottom bar	●	●	●	●	●	●
Stainless steel bracket	●	●	●		●	
Cylinder lock	●	●	●		●	●

MODEL 600

The Model 600 is ideal for light commercial applications where economy and functionality are important. A unique rolled galvanized steel slat curtain with bottom weatherseal comes standard; while hood, wind load and chain hoist operation are options that can expand its uses.

Standard features at a glance

Maximum standard width[Δ]	16' (4877 mm)
Maximum standard height[Δ]	16' (4877 mm)
Curtain	26-gauge galvanized steel up to 12'4" (3759 mm) width; 24-gauge galvanized steel up to 16' (4877 mm) width
Slat profile	Flat crown profile type CAW
Finish (interior/exterior)	White/White, White/Brown, Brown/White
Standard mounting	Face-of-wall
Counterbalance	High tensile helical torsion spring housed in a steel tube or pipe barrel assembly
Brackets	Galvanized steel to support counterbalance and curtain
Operation	Manual push-up up to 100 sq. ft. (9290 sq.mm) or 10' x 10' (3048 mm x 3048 mm) Chain hoist over 100 sq. ft. (9290 sq.mm) or 10' x 10' (3048 mm x 3048 mm)
Standard spring	10,000 cycle
Weatherseals	Bottom bar astragal
Guides	Cold roll-formed channel and angle
Bottom bar	Extruded aluminum with weatherseal
Lock	Slide bolts on push-up; padlockable chain keeper with chain hoist
Warranty	24-month limited

Options

Electric operator or chain hoist
Bottom sensing edge
Hood
Wind load package
Galvanized steel endlocks
Between jambs mounting
PowderGuard® Premium powder coat offers full spectrum of up to approximately 200 colors as well as color matching to specification
Lintel seal

Δ Maximum height and width are independent of each other and may vary based on slat profile, material and gauge.

Slat data

CAW slat

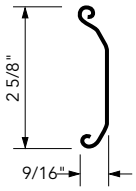

Slat	Opening width	Standard	Optional
CAW	Thru 12'4" (3759 mm)	26-gauge	24-gauge
	Thru 16'0" (4877 mm)	24-gauge	

Slats are galvanized and painted.

Door clearance elevations

Face-of-wall mounted

Operation: Push-up, chain hoist or electric

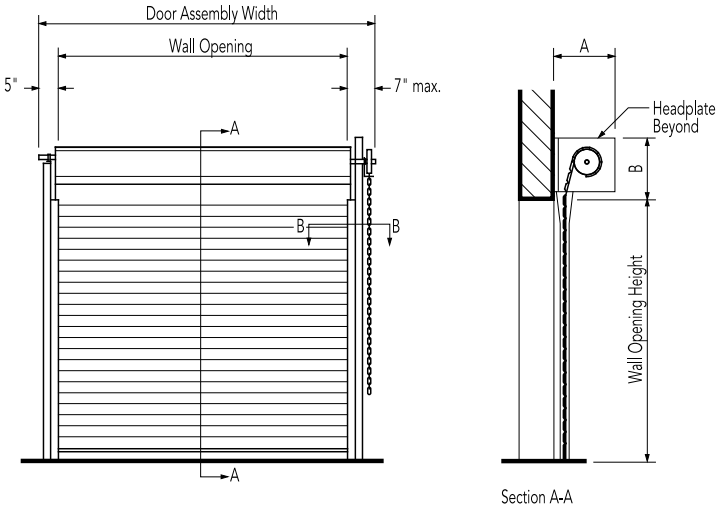

Face-of-wall mounted (with hood)

Operation: Push-up, chain hoist or electric

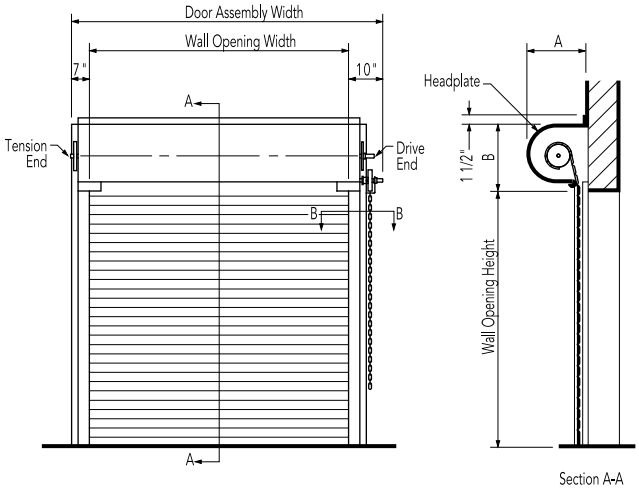

Headroom clearance dimensions Face-of-wall mounted

Dimensions A and B CAW slat					
Opening height		Opening widths thru 16'0" (4877 mm)			
		A		B	
Thru 11'0"	(3353 mm)	13"	(330 mm)	15"	(381 mm)
Thru 16'0"	(4877 mm)	15"	(381 mm)	18"	(457 mm)

Dimensions A and B with optional hood and CAW slat					
Opening height		Opening widths thru 16'0" (4877 mm)			
		A		B	
Thru 16'0"	(4877 mm)	15"	(381 mm)	18"	(457 mm)

Rolled guides Face-of-wall mounted

E guide

Section B-B

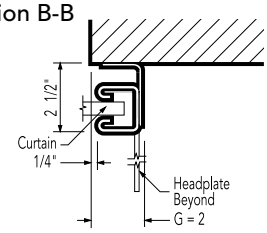

Guide angle welded to steel jamb.

Z guide

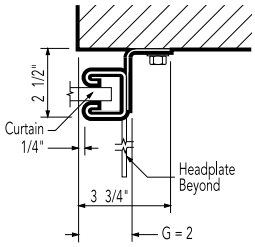

Steel buildings

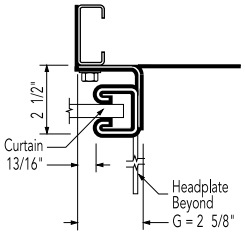

MODELS 610/620

The Model 610 and Stormtite™ Model 620 are suitable for non-insulated heavy-duty commercial applications, and offer thicker steel gauges. The Model 610 comes standard with a curved slat profile, while the Stormtite™ Model 620 features a flat slat profile (also available on 610). Both models come standard with weatherstripping on the exterior side of guides and bottom astragal. The Model 620 offers additional weatherseals and interior hood baffle standard with more options for advanced perimeter protection.

Standard features at a glance

Maximum standard width[Δ]	30'4" (9246 mm)
Maximum standard height[Δ]	28'4" (8636 mm)
Curtain	22-gauge galvanized steel up to 18'4" (5588 mm) wide 20-gauge galvanized steel over 18'4" to 25'4" (5588 -7722 mm) wide 18-gauge galvanized steel over 25'4" to 30'4" (7722-9245 mm) wide
Slat profile	Curved, type C-187 or C-275 (Model 610); Flat, type F-265 (Model 610/620)
Finish	Gray, Tan, Brown or White
Hood	24-gauge galvanized steel
Wind load	20 psf
Standard mounting	Face-of-wall
Operation	Manual push-up up to 84 ft².(7804 mm²) or 12' x 7' (3658 mm x 2134 mm) Chain hoist over 84 ft². (7804 mm²) or 12' x 7' (3658 mm x 2134 mm)
Standard spring	20,000 cycle
Weatherseals	Bottom bar astragal (Models 610/620) Guides and hood baffle (Model 620)
Guides	Three structural steel angles; PowderGuard® Premium finish with black powder coat
Bottom bar	Extruded aluminum w/weatherseal to 15'4" (4674 mm) Back-to-back steel angles w/weatherseal > 15'4" (>4674 mm)
Lock	Interior slide bolt on push-up Padlockable chain keeper on chain hoist
Warranty	24-month limited; 3 years/20,000 cycles limited on Overhead Door™ door and operator system (when purchased together)

Options

- Electric operator (RHX®, RSX®, RMX®) or crank operation
- Bottom sensing edge, sloping bottom bar
- Between-jamb mounting
- Stainless steel or aluminum slats
- High-usage package with up to 100,000 cycle springs
- High-wind load option (FBC, TDI, Dade)*
- Exhaust ports
- Flat slat profile option F-265 and C-600 heavy duty 6" curved slat (Model 610)
- Perforated 18-gauge steel slats with 1/16" (2 mm) diameter holes on 1/16" (2 mm) centers
- Fenestrated slats with uniformly spaced openings of 5/8" x 3" (16 mm x 76 mm) on C-275 or F-265 slats or 1"x10" (25.4 mm x 254 mm) on F265 slat only
- PowderGuard® Premium powder coat paint finish in approximately 200 standard colors, or color-matched to specification;
  PowderGuard® Zinc and PowderGuard® Textured finishes
- Cylinder locks; slide bolts
- Special application doors:
  - Oversized doors to 1500 ft². (139.4 m²)
  - Combination doors with grilles and/or with full or partial standard, perforated or fenestrated slats
  - Spark-resistant doors, craneway doors, pass doors

* FBC – Florida Building Code; TDI – Texas Department of Insurance; Dade – Miami-Dade Building Code Compliance Office.

Δ Maximum height and width are independent of each other and may vary based on slat profile, material and gauge.

Slat data

C-187 slat C-275 slat C-600 slat F-265 slat

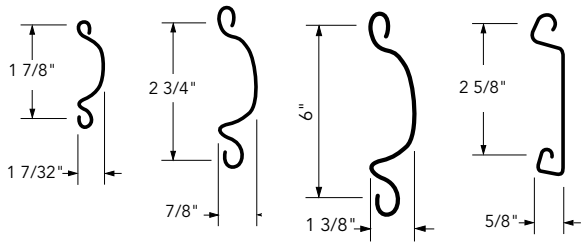

Slat	Opening width	Standard	Optional
C-187	Thru 15'4" (4674 mm)	22-gauge steel	24, 20, 18-gauge steel or 22, 20-gauge stainless steel
*C-275	Thru 18'4" (5588 mm)	22-gauge steel	20,18, 16-gauge steel or 22, 20-gauge stainless steel
	Thru 25'4" (7722 mm)	20-gauge steel	18, 16-gauge steel or 20-gauge stainless steel
	Thru 30'4" (9246 mm)	18-gauge steel	16-gauge steel
*F-265	Thru 18'4" (5588 mm)	22-gauge steel	22, 20, 18, 16-gauge steel or 20, 22-gauge stainless steel 14-gauge aluminum (FE-265 extruded slat)
	Thru 25'4" (7722 mm)	20-gauge steel	20, 18, 16-gauge steel or 20-gauge stainless steel
	Thru 30'4" (9246 mm)	18-gauge steel	18, 16-gauge steel
C-600	Thru 70' (21,336 mm)	18-gauge steel	14-gauge steel

Steel slats are galvanized and painted or stainless steel.
* Consult factory for availability of wider doors.

Door clearance elevations

Face-of-wall mounted

Operation: Chain hoist or electric

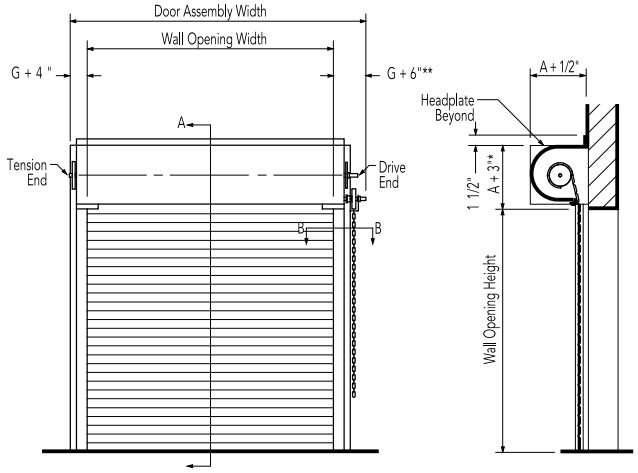

*A+5" for electric operation. ** Add 7" for crank operation.

Between jambs mounted

Operation: Push-up, chain hoist or electric

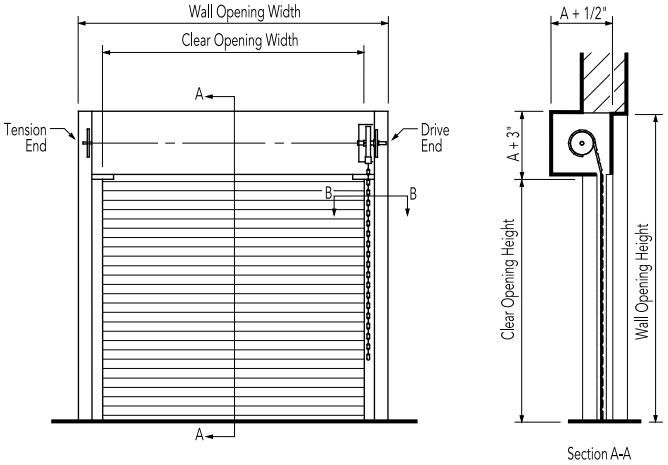

Face-of-wall headroom clearance dimensions

A+5" for electric operation

Dimension A C187 slat
Model 610 only

Opening height	Maximum door opening widths 15'4" (4674)
Thru 6'0" (1829 mm)	14" (356 mm)
Thru 11'0" (3353 mm)	14" (356 mm)
Thru 18'0" (5486 mm)	16" (406 mm)
Thru 21'0" (6401 mm)	18" (457 mm)
Thru 30'0" (9144 mm)	24" (610 mm)

Consult factory for door sizes larger than 30' 0".

Dimension A C275 slat Model 610 only

Opening height	Maximum door opening widths 20'0" (6096 mm)	24'0" (7315 mm)	30'0" (9144 mm)
Thru 6'0" (1829 mm)	14" (356 mm)	14" (356 mm)	18" (457 mm)
Thru 8'0" (2438 mm)	16" (406 mm)	16" (406 mm)	18" (457 mm)
Thru 9'0" (2743 mm)	16" (406 mm)	18" (457 mm)	20" (508 mm)
Thru 11'0" (3353 mm)	16" (406 mm)	18" (457 mm)	20" (508 mm)
Thru 13'0" (3962 mm)	18" (457 mm)	18" (457 mm)	20" (508 mm)
Thru 16'0" (4877 mm)	18" (457 mm)	20" (508 mm)	22" (559 mm)
Thru 18'0" (5486 mm)	20" (508 mm)	22" (559 mm)	24" (610 mm)
Thru 21'0" (6401 mm)	22" (559 mm)	22" (559 mm)	24" (610 mm)
Thru 23'0" (7010 mm)	22" (559 mm)	24" (610 mm)	24" (610 mm)
Thru 25'0" (7620 mm)	24" (610 mm)	24" (610 mm)	26" (660 mm)
Thru 28'0" (8534 mm)	24" (610 mm)	24" (610 mm)	26" (660 mm)
Thru 30'0" (9144 mm)	26" (660 mm)	26" (660 mm)	28" (711 mm)

Dimension A F265 slat

Opening height	Maximum door opening widths 20'0" (6096 mm)	24'0" (7315 mm)	30'0" (9144 mm)
Thru 6'0" (1829 mm)	16" (406 mm)	16" (406 mm)	18" (457 mm)
Thru 8'0" (2438 mm)	18" (457 mm)	18" (457 mm)	20" (508 mm)
Thru 9'0" (2743 mm)	18" (457 mm)	18" (457 mm)	20" (508 mm)
Thru 11'0" (3353 mm)	18" (457 mm)	18" (457 mm)	20" (508 mm)
Thru 13'0" (3962 mm)	20" (508 mm)	20" (508 mm)	20" (508 mm)
Thru 16'0" (4877 mm)	20" (508 mm)	20" (508 mm)	22" (559 mm)
Thru 18'0" (5486 mm)	20" (508 mm)	22" (559 mm)	24" (610 mm)
Thru 21'0" (6401 mm)	22" (559 mm)	24" (610 mm)	24" (610 mm)
Thru 23'0" (7010 mm)	22" (559 mm)	24" (610 mm)	24" (610 mm)
Thru 25'0" (7620 mm)	24" (610 mm)	24" (610 mm)	26" (660 mm)
Thru 28'0" (8534 mm)	26" (660 mm)	26" (660 mm)	26" (660 mm)
Thru 30'0" (9144 mm)	26" (660 mm)	26" (660 mm)	28" (711 mm)

Face-of-wall angle guide clearance dimensions

Add 7" to G+6" dimension for crank operation

Dimensions G, M and D* C187 slats

	Maximum door opening widths 8'0" (2438 mm)	15'0" (4572 mm)	20'0" (6096 mm)
G	3" (76 mm)	3 1/2" (89 mm)	4" (102 mm)
M	4 3/4" (121 mm)	6 1/4" (159 mm)	6 3/4" (171 mm)
D	4 1/2" (114 mm)	4 1/2" (114 mm)	5" (127 mm)

Dimensions G, M and D* C275 and F265 slats

	Maximum door opening widths 9'0" (2743 mm)	15'0" (4572 mm)	20'0" (6096 mm)	30'0" (9144 mm)	40'0" (12,192 mm)
G	3" (76 mm)	3 1/2" (89 mm)	4" (102 mm)	4 1/2" (114 mm)	5 5/8" (144 mm)
M	5 1/4" (133 mm)	5 3/4" (146 mm)	7 1/4" (184 mm)	9 1/4" (235 mm)	10 1/2" (267 mm)
D	4 1/2" (114 mm)	5 1/2" (140 mm)	5" (127 mm)	6" (152 mm)	6" (152 mm)

* For maximum door opening height. Note: Wind bars provided for doors over 15' 4" (4674 mm). Model 620 guides include weatherstrip on exterior side of door.

Angle guide

Face-of-wall mounted

E guide

Section B-B

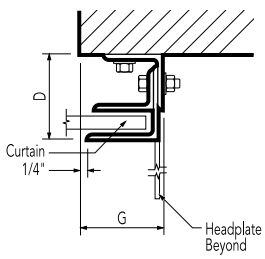

Z guide

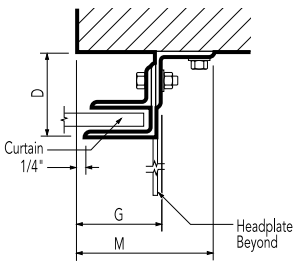

Between jambs mounted

Section B-B

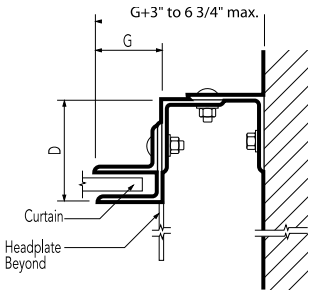

MODEL 625

The Stormtite™ Model 625 is an insulated, heavy-duty rolling service door that is an ideal choice for applications requiring a moderate level of thermal protection. Designed in sizes up to 30'4" wide and 28'4" high (9246 mm and 8636 mm), these doors are constructed with a CFC-free, foamed-in-place polyurethane insulation (R-value 7.7). Vinyl weatherstripping on the bottom bar, exterior curtainside weatherseal guide and hood baffle are standard features and provide additional protection against air infiltration.

Standard features at a glance

Maximum standard width[Δ]	30'4" (9246 mm)
Maximum standard height[Δ]	28'4" (8636 mm)
Curtain	24-gauge galvanized steel front 24-gauge galvanized steel back
Slat profile	Flat, insulated, type F-265i
Insulation	Foamed-in-place, CFC and HCFC-free polyurethane
R-value*	7.7 (1.35 W/Msq)
STC Rating	21
Finish	Gray, Tan, Brown or White
Hood	24-gauge galvanized steel
Wind load	20 psf
Standard mounting	Face-of-wall
Operation	Chain hoist
Standard spring	20,000 cycle
Weatherseals	Bottom, exterior curtain-side guide, interior hood baffle
Guides	Three structural steel angles; PowderGuard® Premium finish with black powder coat
Bottom bar	Primed steel with vinyl weatherseal
Lock	Padlockable chain keeper
Warranty	24-month limited; 3 years/20,000 cycles limited on Overhead Door™ door and operator system (when purchased together)

Options

- Air infiltration package that meets requirements of IECC code, which includes: guide cover and cap; dual brush guide seal, lintel seal, bottom astragal
- Electric operator (RHX®, RSX®, RMX®) or crank operation
- Bottom sensing edge; sloping bottom bar
- Galvanized steel bottom bar angles and guides; insulated guides
- Between-jamb mounting
- Stainless steel or aluminum slats
- High-usage package with up to 100,000 cycle spring
- High-wind load option (FBC, TDI, Dade)[†]
- Weatherseal for interior side guide
- Lintel seal
- Cylinder lock; slide bolts
- Exhaust ports
- Vision lites with uniformly spaced openings of 5/8"x 3" (16 mm x 76 mm) or 1" x 10" (25.4 mm x 254 mm)
- PowderGuard® Premium powder coat paint finish in approximately 200 standard colors, or color-matched to specification; PowderGuard® Zinc and PowderGuard® Textured finishes
- Special application doors:
  - Oversized doors to 1500 ft². (139.4 m²)
  - Combination doors with grilles and/or with full or partial standard, perforated or fenestrated slats
  - Spark-resistant doors, craneway doors, pass doors

Slat data

F-265i slat

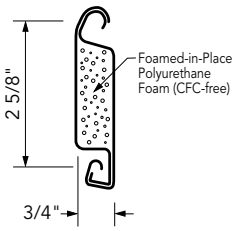

R-value* 7.7 (1.35 W/Msq)
U-value .13
Smoke generation = 10
Flame spread = 5
STC = 21

Slat	Opening width	Standard	Optional
F265i	Thru 30'4" (9246 mm)	24-gauge steel	22, 20, 18-gauge steel 22, 20-gauge stainless steel .040" aluminum, 18-gauge

Slats are galvanized and painted, stainless steel (specify finish) or aluminum (specify finish). Gauges reflect front slat; back slat is standard 24-gauge on steel and stainless steel; Aluminum back slat is 22-gauge.

Headroom clearance dimensions Face-of-wall

Consult factory for doors wider than 23'0". For Face-of-wall mount use A+ 5" for electric.

Dimension A F265i slat

Opening height		Maximum door opening widths					
		20'0"	(6096 mm)	24'0"	(7315 mm)	30'0"	(9144 mm)
Thru 6'0"	(1829 mm)	16"	(406 mm)	16"	(406 mm)	18"	(457 mm)
Thru 8'0"	(2438 mm)	18"	(457 mm)	18"	(457 mm)	20"	(508 mm)
Thru 9'0"	(2743 mm)	18"	(457 mm)	18"	(457 mm)	20"	(508 mm)
Thru 11'0"	(3353 mm)	20"	(508 mm)	20"	(508 mm)	22"	(559 mm)
Thru 13'0"	(3962 mm)	20"	(508 mm)	20"	(508 mm)	22"	(559 mm)
Thru 16'0"	(4877 mm)	22"	(559 mm)	24"	(610 mm)	24"	(610 mm)
Thru 18'0"	(5486 mm)	24"	(610 mm)	24"	(610 mm)	26"	(660 mm)
Thru 21'0"	(6401 mm)	24"	(610 mm)	24"	(610 mm)	26"	(660 mm)
Thru 23'0"	(7010 mm)	26"	(660 mm)	26"	(660 mm)	26"	(660 mm)

Some options may affect clearance dimensions.

† Wind Load options available to meet:
FBC - Florida Building Code
TDI - Texas Department of Insurance
Dade - Miami-Dade Building Code Compliance Office

* R-value is a measure of thermal efficiency. The higher the R-value the greater the insulating properties of the door. Overhead Door Corporation uses a calculated door section R-value for our insulated doors.

Δ Maximum height and width are independent of each other and may vary based on slat profile, material and gauge.

Door clearance elevations

Face-of-wall mounted

Operation: Chain hoist or electric

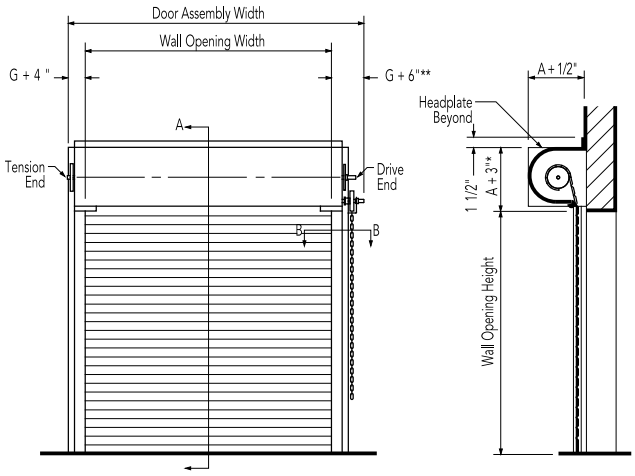

*A+5" for electric operation. ** Add 7" for crank operation.

Between jambs mounted

Operation: Push-up, chain hoist or electric

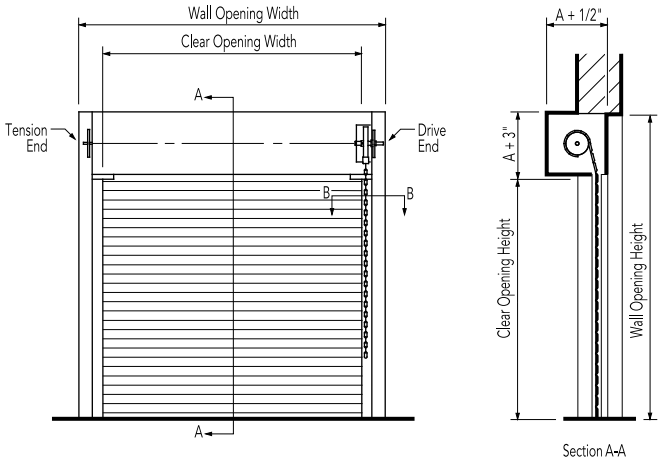

Angle guide clearance dimensions

Face-of-wall mounted

Dimensions G, M and D* F265i slat

Dimensions maximum door opening widths

	9'0"	(2743 mm)	15'0"	(4572 mm)	20'0"	(6096 mm)	30'0"	(9144 mm)	40'0"	(12,192 mm)
G	3"	(76 mm)	3 1/2"	(89 mm)	4"	(102 mm)	5 5/8"	(143 mm)	5 5/8"	(143 mm)
M	5 1/4"	(133 mm)	6 1/4"	(159 mm)	7 1/4"	(184 mm)	10 1/4"	(260mm)	11 1/4"	(286 mm)
D	4 1/2"	(114 mm)	5 1/2"	(140 mm)	5 1/2"	(140 mm)	6"	(152 mm)	6"	(152 mm)

* For maximum door opening height
Wind bars included on doors over 14' (4267 mm) wide.
Add 7" to G+6" dimension for crank operation

Between jambs mounted

Dimensions G and D* F265i slat

Dimensions maximum door opening widths

	9'0"	(2743 mm)	15'0"	(4572 mm)	20'0"	(6096 mm)	30'0"	(9144 mm)	40'0"	(12,192 mm)
G	3"	(76 mm)	3 1/2"	(89 mm)	4"	(102 mm)	5 5/8"	(143 mm)	5 5/8"	(143 mm)
D	4 1/2"	(114 mm)	5"	(127 mm)	5"	(127 mm)	6"	(152 mm)	6"	(152 mm)

* For maximum door opening height
Wind bars included on doors over 14' (4267 mm) wide

Angle guide

Face-of-wall mounted

E guide | Z guide

Section B-B

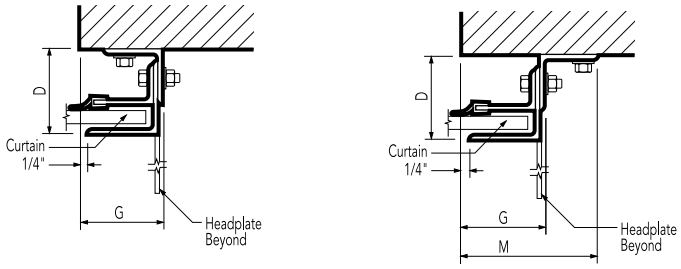

Between jambs mounted

Section B-B

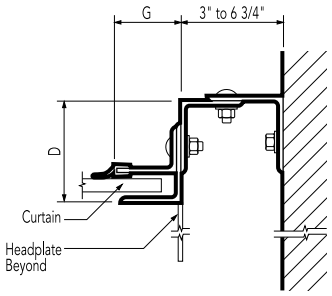

Model 625, Black powder coat finish

Model 610, perforated curtain

MODEL 627

The Stormtite™ AP Model 627 is the best-in-class insulated, heavy-duty rolling service door. It is engineered to supply advanced performance in industrial and general commercial applications where thermal performance, climate control and security are primary concerns. The uniquely designed flat slat profile measures 1.4" thick, and is constructed with a CFC-free, foamed-in-place polyurethane insulation (R-value 10.9). Advanced perimeter protection features are standard.

Standard features at a glance

Maximum standard width[Δ]	30'4" (9144 mm)
Maximum standard height[Δ]	19'4" (5893 mm)
Curtain	24-gauge galvanized steel front 24-gauge galvanized steel back
Slat profile	Flat, insulated, FIT-265 profile
Insulation	Foamed-in-place, CFC and HCFC-free polyurethane
R-value*	10.9 (1.91 W/Msq)
U-factor	0.84
STC Rating	Through curtain 28, installed system 21
Flame spread and smoke index	Class A or 1
Finish	Gray, Tan, Brown or White
Hood	24-gauge galvanized steel
Wind load	20 psf
Standard mounting	Face-of-wall
Operation	Chain hoist
Standard spring	20,000 cycle
Advanced perimeter protection	Bottom weatherseal, interior and exterior EPDM triple-finned guide brush weatherseals, interior hood baffle and lintel seal
Guides	Three structural steel angles; PowderGuard® Premium finish with black powder coat
Bottom bar	Black powder coated steel with vinyl weatherseal
Lock	Padlockable chain keeper
Warranty	24-month limited; 3 years/20,000 cycles limited on Overhead Door™ door and operator system (when purchased together)

Slat data

FIT-265 slat

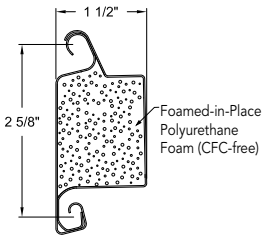

This uniquely designed rolling door slat measuring 1.4" in thickness, provides advanced thermal performance and increased durability.

Options

- Air infiltration package that meets requirements of IECC code, which includes: guide cover and cap; interior and exterior triple-finned brush guide seal, lintel seal, bottom astragal
- Between-jamb mounting
- Electric (RHX®, RSX®, RMX®) or crank operation
- Bottom sensing edge
- Sloping bottom bar
- Stainless steel (22-gauge front/24-gauge back) or aluminum slats (18-gauge front / 22-gauge back)
- PowderGuard® Zinc or PowderGuard® Textured finishes available on curtain, steel bottom bar angles and guides
- PowderGuard® Premium powder coat paint finish in approximately 200 standard colors, or color-matched to specification
- Insulated vision lites uniformly spaced of 1" x 10" (25.4 mm x 254 mm)
- High usage package with up to 100,000 cycle springs
- Wind load option available
- Cylinder lock; slide bolts
- Special application doors:
  - Combination doors with grilles and/or with full or partial standard, perforated or fenestrated slats
  - Pass doors

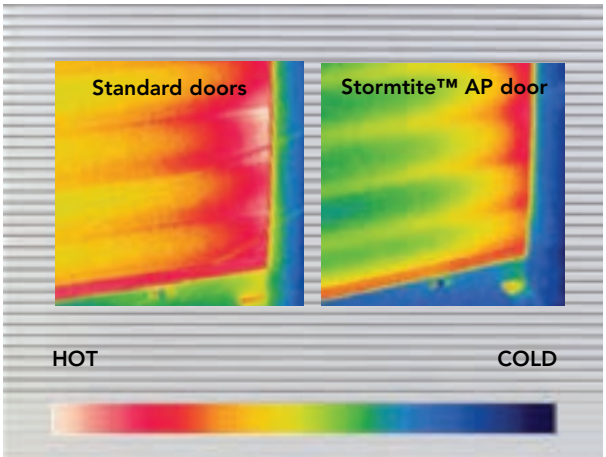

* R-value is a measure of thermal efficiency. The higher the R-value the greater the insulating properties of the door. Overhead Door Corporation uses a calculated door section R-value for our insulated doors.

Δ Maximum height and width are independent of each other and may vary based on slat profile, material and gauge.

Slat	Opening width	Standard	Optional
FIT-265	Thru 30'4" (9246 mm)	24-gauge steel	22-gauge stainless steel, aluminum

Door clearance elevations

Face-of-wall mounted

Operation: Manual, chain hoist or electric

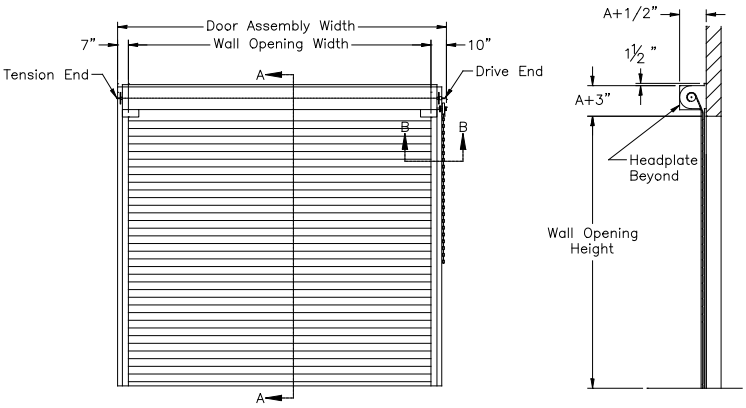

Between jambs mounted

Operation: Manual, chain hoist or electric

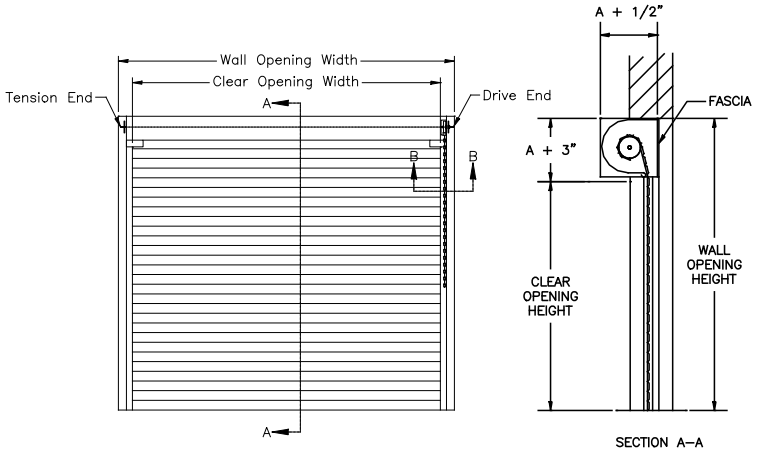

*A+5" for motor operated doors. ** Add 7" for crank operation.

Headroom clearance dimensions

Dimension A Face-of-wall-mounted

Opening height	Maximum door opening widths					
	20'0"	(6096 mm)	24'0"	(6096 mm)	30'0"	(9144 mm)
Thru 6'0" (1829 mm)	22"	(559 mm)	22"	(559 mm)	24"	(610 mm)
Thru 8'0" (2438 mm)	24"	(610 mm)	24"	(610 mm)	26"	(660 mm)
Thru 9'0" (2743 mm)	26"	(660 mm)	26"	(660 mm)	26"	(660 mm)
Thru 11'0" (3353 mm)	26"	(660 mm)	26"	(660 mm)	28"	(711 mm)
Thru 13'0" (3962 mm)	28"	(711 mm)	28"	(711 mm)	30"	(762 mm)
Thru 16'0" (4877 mm)	30"	(762 mm)	30"	(762 mm)	32"	(813 mm)
Thru 18'0" (5791 mm)	32"	(813 mm)	32"	(813 mm)	32"	(813 mm)
Thru 19'0" (6401 mm)	32"	(813 mm)	34"	(864 mm)	34"	(864 mm)

Consult factory for door sizes larger than 19'0"

Angle guide clearance dimension

Dimensions G, M and D* Face-of-wall

	Maximum door opening widths							
	No wind bar		With wind bar					
	9'0"	(2743 mm)	15'0"	(4572 mm)	20'0"	(6096 mm)	30'0"	(9144 mm)
G	3"	(76 mm)	3 1/2"	(89 mm)	4"	(102 mm)	5 9/16"	(140 mm)
M	5 3/4"	(146 mm)	6 1/4"	(159 mm)	7 1/4"	(184 mm)	9 1/4"	(235 mm)
D	5 11/16"	(144 mm)	6 1/4"	(159 mm)	6 3/16"	(157 mm)	7 1/16"	(179 mm)

* For maximum door opening height

Dimensions G, M and D* Between jamb

	Maximum door opening widths							
	No wind bar		With wind bar					
	12'0"	(3658 mm)	15'0"	(4572 mm)	20'0"	(6096 mm)	30'0"	(9144 mm)
G	3 1/4"	(83 mm)	3"	(76 mm)	3 1/2"	(89 mm)	5"	(127 mm)
D	6 1/4"	(159 mm)	7 1/4"	(108 mm)	7 1/4"	(108 mm)	7 5/8"	(194mm)

* For maximum door opening height

Angle guide

Face-of-wall mounted

E guide | Z guide

Between jambs mounted

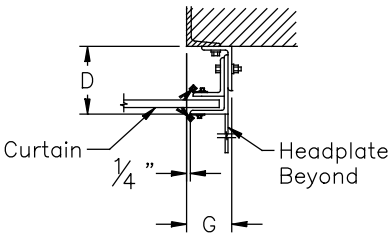

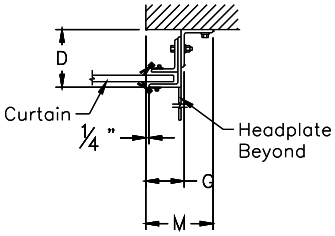

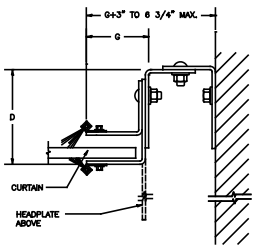

SPECIAL APPLICATION DOORS MODELS 610/620/625/627

We manufacture Rolling Steel Service Doors for unique specifications or circumstances. Designers and builders rely on our knowledge, expertise, quality and workmanship for a variety of special application doors – including those that allow access for cranes or pedestrians, oversized doors for railroad cars or aircraft, high-usage doors for heavy-traffic openings, and combination doors for air and light infiltration.

High-usage doors

EverServe™ models 610S, 620S and 625S are available as a springless door alternative and 500,000 cycle life.

A special high-usage package is also available providing an array of rugged quality component assemblies to ensure reliable, long-term performance for high traffic areas. The package includes a choice of higher-cycle springs. **Available on Models 610, 620, 625 and 627.**

IECC compliance package for air infiltration

Optional package includes a guide cover and cap, enhanced guide seal, lintel seal and bottom astragal. **Available on Models 625 and 627.**

Oversized doors

We offer large doors in sizes up to 1500 square feet (139,355 sq. mm)*, for applications ranging from aircraft hangars to railway loading sheds.
Available on Model 610.

Craneway doors

Craneway doors are especially convenient in warehouses and work areas where large industrial equipment is used or stored. **Available on Models 610, 620 and 625.**

Pedestrian pass doors

ADA-compliant pass doors provide a means of passage for pedestrian traffic without raising the rolling door.
Available on Models 610, 620, 625 and 627.

Vision, light infiltration, airflow

Ventilated doors with perforated or fenestrated slats restrict unauthorized entry while allowing visual access and air circulation. **Available on Model 610.**

Model 610, C-275 slat, tan finish, mounted over aluminum doors

Fenestrated service doors are ideal for applications where ventilation and/or light transference are important. Vision lights are also available featuring fenestrations with acrylic panels to provide full access without air infiltration. **Available on Models 610, 620, 625 and 627.**

Combination doors

Custom designed combination doors to fit unique situations and unusual applications. The most common combination door is a grille mounted on a rolling steel door to provide security while also permitting free air flow and/or visual access when desired. **The grille option is available on Models 610, 620, 625 and 627.** Other types of combination doors include a door-on-door, such as a perforated door mounted on a standard rolling door. A single-curtained door fabricated of two or more slat styles and configurations allows customization to unusual requirements.

Spark-resistant doors

Used in conjunction with explosion-proof electric operators, the Overhead Door™ spark-resistant doors offer an added measure of safety in volatile environments. Common applications include grain elevators, chemical plants and paint spray booths.
Available on Models 610, 620, 625 and 627.

High wind load doors

Doors designed for high wind load conditions to withstand wind loading well in excess of our standard 20 psf capacity. Doors are computer-designed and built to meet stringent wind load standards, such as those required by Miami/Dade County building codes.
Available on Models 600, 610, 620 and 625.

Bottom sloping bars

Models 610, 620, 625 and 627 are available with a sloping bottom bar to accommodate unlevel or sloping conditions.

Advanced service doors

We manufacture a product line of advanced service doors that offer increased speed, security and durability.

*Consult factory for larger openings

Special application door clearance elevations

Crane door interior elevation

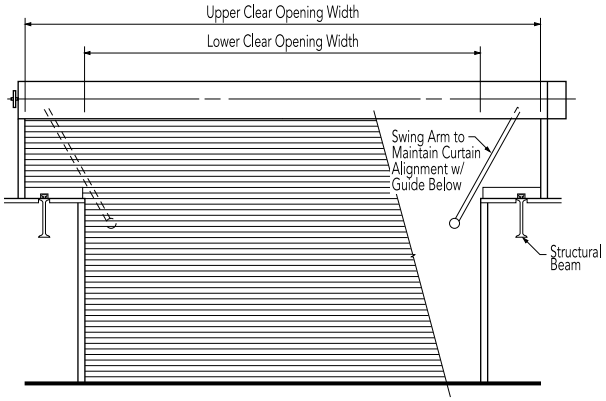

Ventilated service doors interior elevation

Fenestrated door

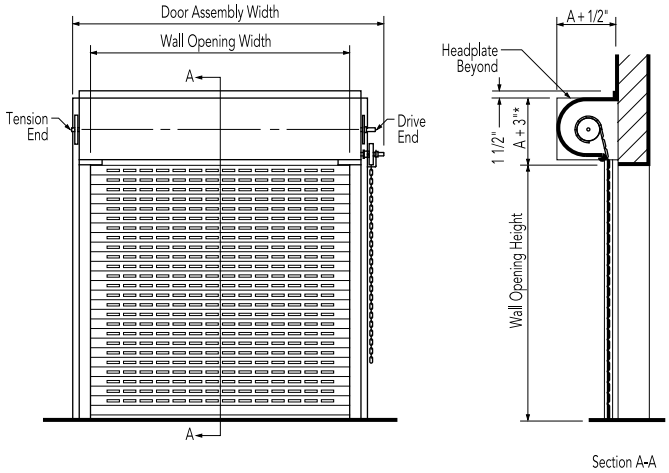

See Model 610 for applicable headroom and guide clearance details and dimensions.

Combination door & grille door clearance elevations

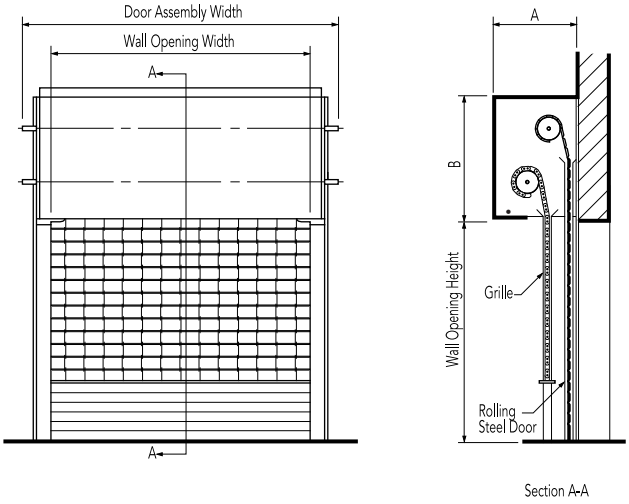

Service door with pedestrian pass door interior

Swing-in door

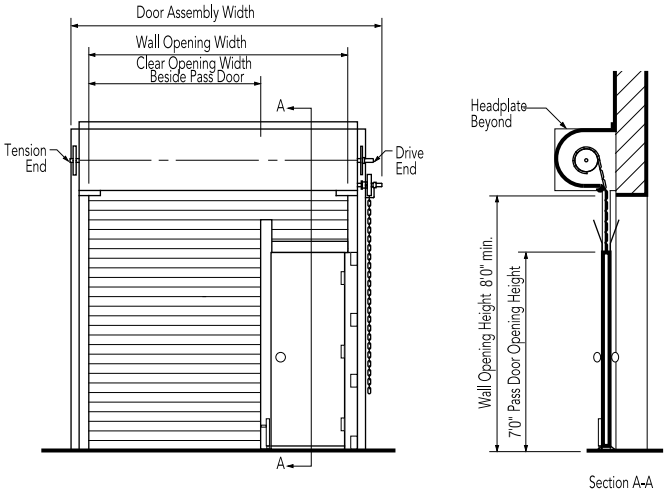

Pedestrian pass doors installed on Overhead Door™ Rolling Service Doors are ADA accessible.

Special application slat data

Fenestrated slat door

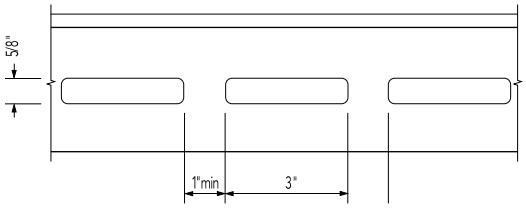

Perforated slat door

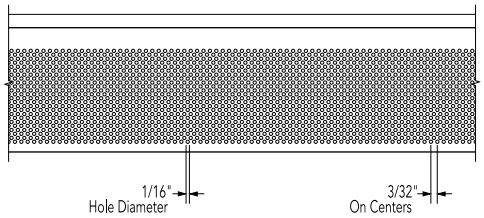

Electric operators

We offer a broad line of electric operators to suit new construction and retrofit applications, as well as unusual or special requirements. In order to improve safety and enhance door and motor life, industry quality assurance guidelines recommend the choice of a single manufacturer for both door and operator applications.

We are one of the only national manufacturers to offer a full line of commercial and industrial doors and operators specifically designed for integral applications.

Model RHX®

Model RHX® is a heavy duty commercial operator designed to operate doors up to 24' (7315 mm) in height and 3696 pounds (1676 kg). Supports front-of-hood, bench mount, top-of-hood and wall mount applications.

Model RSX®

Model RSX® is a standard duty commercial operator designed to operate doors up to 24' (7315 mm) in height and 1,440 pounds (653 kg). It offers unique features like LimitLock®, SuperBelt™ and 16 digit menu setup.

Model RMX®

Model RMX® is our most advanced medium-duty operator. It is designed for quicker installation and hassle-free operation and operates doors up to 16' (4876 mm) in height and 580 pounds (263 kg). Supports front-of-hood or wall mount applications.

Operator control options

- Push-button, key or combination stations; surface or flush-mounted for interior and/or exterior locations
- Vehicle detectors, photocell and door timer controls
- Treadle or pull switch stations
- Wireless keypad entry and coded keyboard stations
- Universal programmable door timer
- Radio control systems (24 VAC or 120 VAC)
- Explosion and dust ignition-proof systems

Electric operator selection guide

	Horsepower	Maximum height of door	Maximum weight of door	Super Belt®/ Chain-sprocket	Worm gear	Open drip proof	Totally enclosed	Fan cooled	NEMA 4X	Explosion proof NEMA 7/9	Mounting type
RHX®	1/2 HP, 3/4 HP, 1 HP, 3 HP	24' (7315 mm)	3696 lbs (1676 kg)		S	S	O	O	O	O	B, F, T, W
RSX®	1/2 HP, 3/4 HP 1 HP	24' (7315 mm)	1440 lbs (653 kg)	S		S	O	O	O		B, F, T, W
RMX®	1/2 HP	16' (4876 mm)	580 lbs (263 kg)	S		S					F, T, W

Mounting options:
F=Front of hood B=Bench Mount W=Wall mount T=Top of hood
S=Standard O= Optional, not available for all HP models

Safety recommendations

We strongly recommend the use of interlock switches and monitored safety edge for all electrically operated rolling service doors. If a monitored safety edge or other reversing device is not installed, a constant-contact control switch must be used to close the door. Contact your Overhead Door™ Distributor for more information.

Model 625, F265 slat with 10" by 1" fenestration Gray finish with pedestrian pass door.

Mounting details

Front-of-hood mounted RHX®

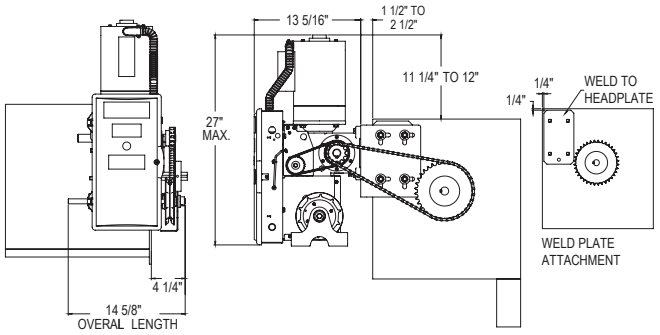

Top-of-hood mounted RHX®

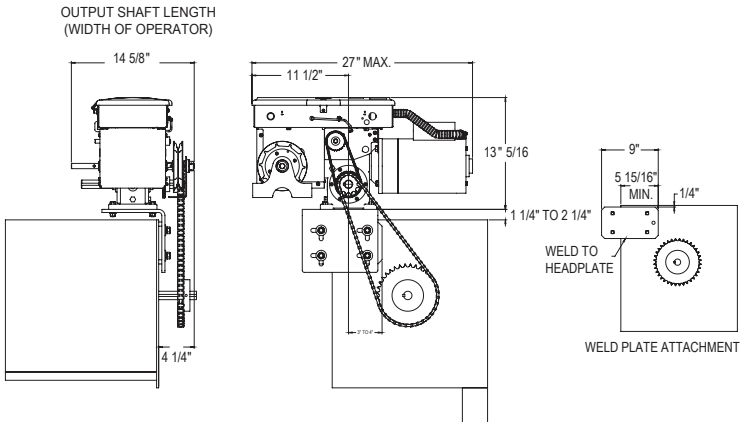

Front-of-hood mounted RSX®

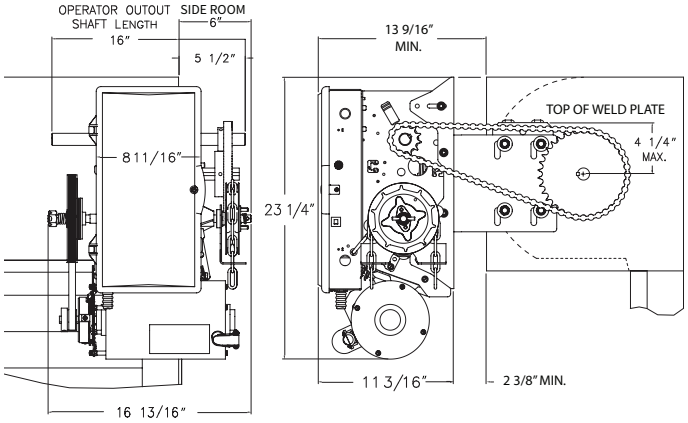

Top-of-hood mounted RSX®

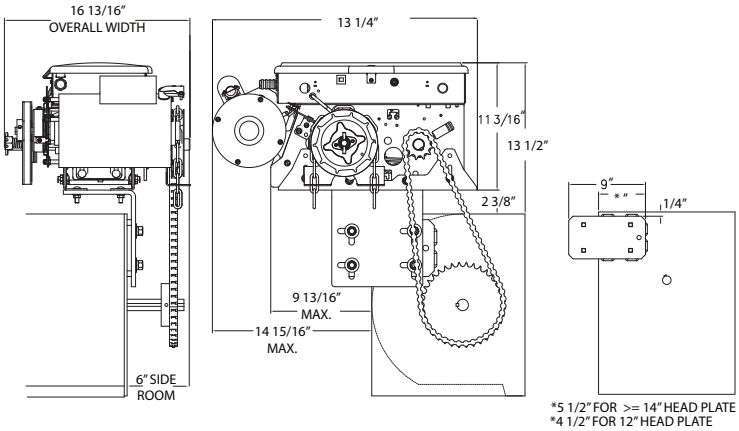

Front-of-hood mounted RMX®

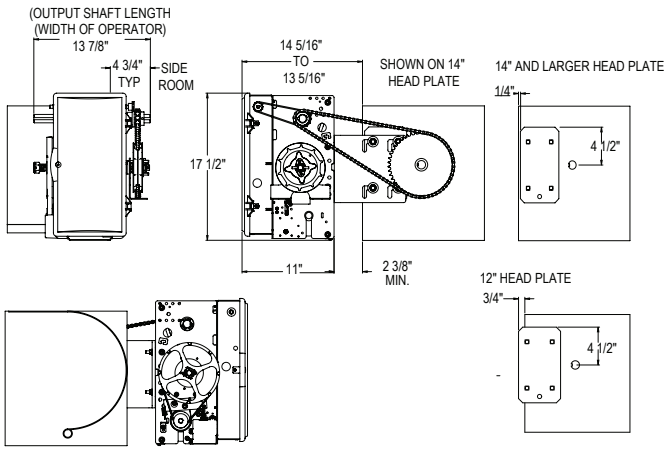

Top-of-hood mounted RMX®

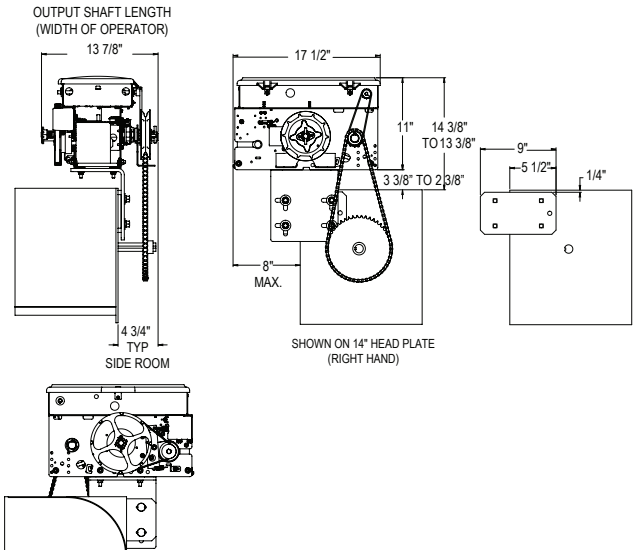

Mounting details

Wall mounted (below shaft) RHX®

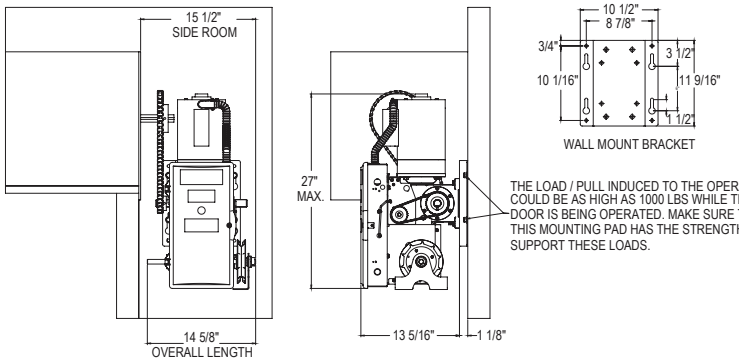

Bench mounted RHX®

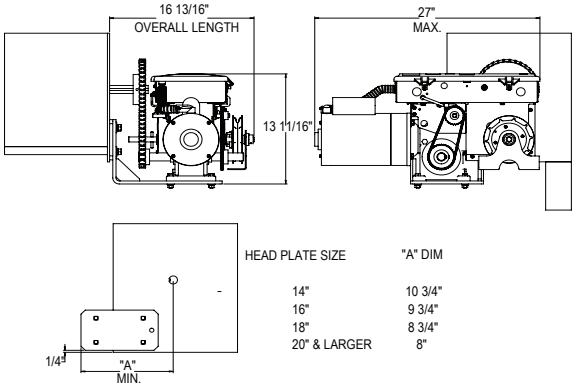

Wall mounted RSX®

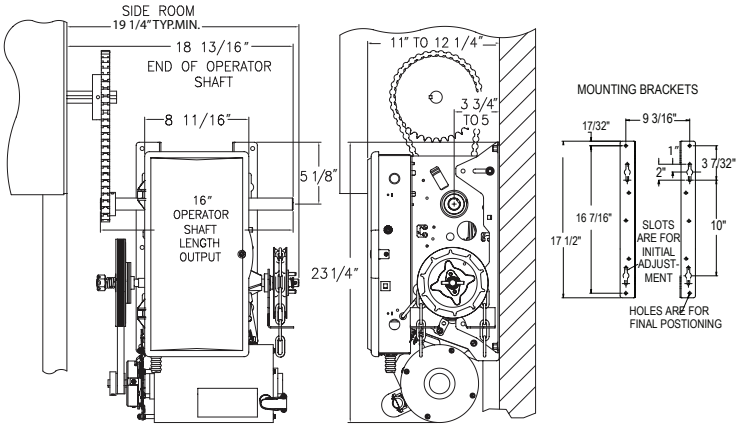

Bench mounted RSX®

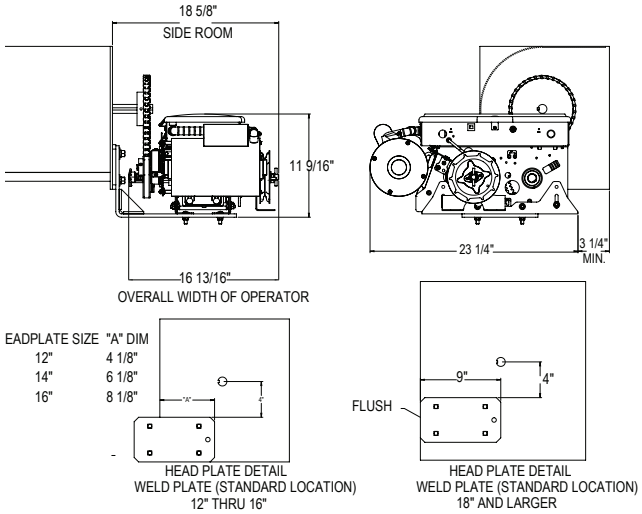

Wall mounted RMX®

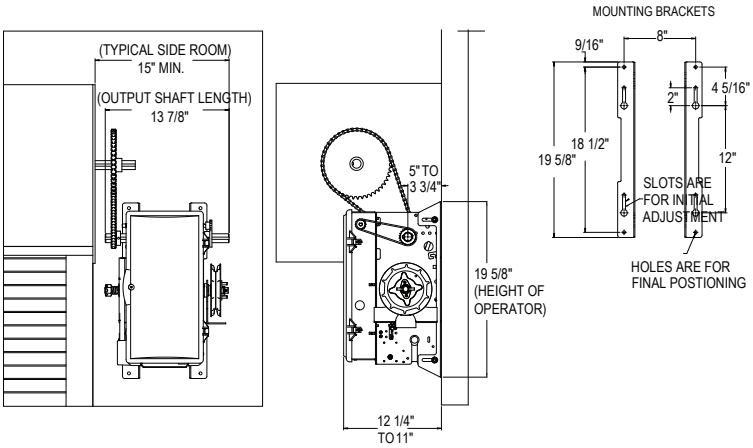

Notes for all mounting details:

1. Please verify voltage, phase and mounting
2. All options are at added cost
3. A clearance of 6" should be allowed for access to electric box
4. Control voltage is a NEC class 2 circuit
5. Average door travel speed is 8" per second
6. For "A" and "G" dimensions, refer to Headroom and Guide Clearance. Dimension charts applicable to grille type selected.

* Front-of-Hood mounted also available on between jambs mounted grilles.

For more detailed information, visit our Architects Corner at **overheaddoor.com/architect-corner** or consult your local Overhead Door™ Distributor.

Model 620, gray finish with sloped bottom bar

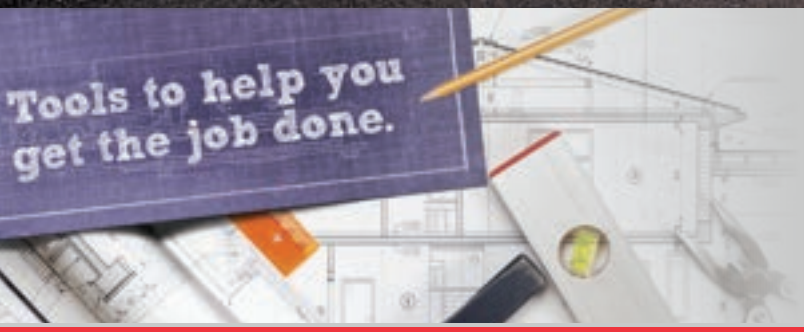

Architect's Corner

A resource for architects, containing comprehensive technical and resource materials to support your project, including drawings and specifications for commercial doors.

www.overheaddoor.com

The original, innovative choice for unequalled quality and service.

Overhead Door Corporation pioneered the sectional garage door industry, inventing the first sectional garage door in 1921 and the first electric door operator in 1926. Today, we continue to be the industry leader through the strength of our product innovation, superior craftsmanship and outstanding customer support, underscoring a legacy of quality, expertise and integrity. That's why design and construction professionals specify Overhead Door™ products more often than any other brand. Our family of over 400 Overhead Door™ Distributors across the U.S. and Canada not only share our name and logo, but also our commitment to excellence.

OVERHEAD DOOR®

INDUSTRY LEADING
COMMERCIAL & INDUSTRIAL SOLUTIONS

2501 S. State Hwy. 121 Bus., Suite 200, Lewisville, TX 75067
1-800-929-DOOR • sales@overheaddoor.com
overheaddoor.com

©2020 Overhead Door Corporation. Overhead Door is a trademark and RHX, RMX, RSX and the Red Ribbon logo are registered trademarks of Overhead Door Corporation.
All other trademarks are property of their rightful owners. Consistent with our policy of continuing product improvement,
we reserve the right to change product specifications without notice or obligation. C900-066 01/20