Upward-Coiling Security Grille Systems

PRODUCT LINE		MODELS
	STANDARD UPWARD-COILING GRILLE	670/671/674
	SPRINGLESS ROLLING GRILLE	671S
	ADVANCE PERFORMANCE GRILLE	676

OVERHEAD DOOR®

INDUSTRY LEADING
COMMERCIAL & INDUSTRIAL SOLUTIONS

General Features and Benefits

Our Upward-Coiling Security Grilles provide an array of attractive solutions for a spectrum of retail, commercial and industrial applications.

We offer a complete line of upward-coiling grilles. Constructed of aluminum, stainless or galvanized steel – with optional electric motor – these grilles are designed for durability and easy operation.

Backed by the best service company in the industry, a market-leading warranty and over 400 Overhead Door™ Distributors nationwide – our comprehensive line of security grilles affords both reliable security and peace of mind.

Cover image and image above: Model 676

Model 671, NY ZOO

Model 670. Installation and Service: Overhead Door Company of New York™

General Specifications

Specifications	Model 670	Model 671	Model 674	Model 671S	Model 676
Operation					
Manual push-up	Standard	Standard	Standard		
Chain hoist	Option	Option	Option		
Crank	Option	Option	Option		
Electric operator	Option	Option	Option	Standard	Standard
Curtain material/finish					
Galvanized steel		Standard		Standard	Standard
Aluminum mill finish	Standard				Option
Aluminum clear anodized	Option		Standard		Option
Powder coat to match aluminum bronze anodized	Option				
Stainless steel #4		Option			
Stainless steel #2B		Option			
PowderGuard®	Option	Option	Option		
Pattern					
Straight lattice	Standard	Standard		Standard	Standard
Straight lattice with polycarbonate inserts	Option	Option			
Brick	Option	Option		Option	Option
Perforated slat			Standard		
Emergency Egress					
Manual release	Option	Option		Standard	Standard
Automatic release	Option	Option			
Locking*					
Slide bolt	Standard with Pushup or Crank	Standard with Pushup or Crank			
Locking bottom bar w/ cylinder or thumb turn	Option	Option	Standard		
Chain lock	Option	Option			
Security rods	Option	Option			
Interlocks	Option	Option	Option		
Lock links (with automatic EEG)	Standard	Standard			
Hood					
Galvanized steel	Option	Option	Option	Standard	Standard
Aluminum mill finish	Option			Option	Option
Aluminum clear anodized	Option		Option	Option	Option
Powder coat to match aluminum bronze anodized	Option		Option	Option	Option
Stainless steel #4	Option	Option		Option	Option
Stainless steel #2B					
PowderGuard®	Option	Option	Option	Option	Option

* Check with local authorities having jurisdiction regarding locking mechanisms when using emergency egress operation.

Model 674, perforated.

MODELS 670/671/674

These grilles provide an attractive yet functional means to secure areas where public access must be restricted, without blocking air, light or sight. A wide range of options make these grilles an ideal choice for interior or exterior use in a variety of retail, industrial and commercial settings.

Standard Features at a Glance

Operation	Manual unless size requires chain hoist
Curtain	
Material/Finish	670: aluminum, mill finish 671: galvanized steel or optional stainless steel (2B or 4) 674: aluminum, clear anodized
Pattern	670/671: straight lattice (standard); staggered brick; straight with polycarbonate panels 674: perforated aluminum panels
Bottom bar	670: Extruded aluminum, mill finish 671: Double angle galvanzied steel 674: Extruded aluminum, clear anodized
Guide type	Guide channels are extruded aluminum with continuous wear strips; 670/671 mill finish; 674 clear anodized; Wall angles and any pack-out angles are steel with black powder coat finish
Mounting	Interior face of wall is standard Between jamb option available
Brackets	Steel with black powdercoat finish
Pipe	Steel sized for maximum deflection of .03" per linear foot
Springs	Oil tempered, 20,000 cycle, torsion springs
Locking	670/671: Slide bolt for manual and crank operation; chain lock for chain hoist operation 674: Center locking bottom bar, with 1/2" diameter steel throw rods; Comes standard with cylinder locks on both sides or thumb turn on secured side
Warranty	12 month limited

Options

Operation: Electric operator, chain hoist, removable awning crank

Electric operator with automatic emergency egress (670, 671); compliant with IBC 1008.1.4.4 & NFPA 101

Controls: Card reader, keypad access

Hood: Primed galvanized or stainless steel, mill finish or clear anodized aluminum

Fascia or back hoods: Primed galvanized or stainless steel, mill finish or clear anodized aluminum

Optional guide finishes: clear or bronze anodized, stainless steel

PowderGuard® premium powder coat paint finish in approximately 200 standard colors, or color-matched to specification available on hood, curtain, bottom bar, guides, headplates. For a smooth, durable finish consider powder coat to match aluminum clear or bronze anodized.

PowderGuard® Zinc and PowderGuard® Textured finishes

Heavy usage package (670/671)

Locking options include cylinder locks, slide bolts (670, 671), security rods (670, 671), interlocks

Fire retardant polycarbonate panels

Grille Patterns

Staggered Brick	Straight Lattice	Polycarbonate (Lexan® or similar)	Perforated

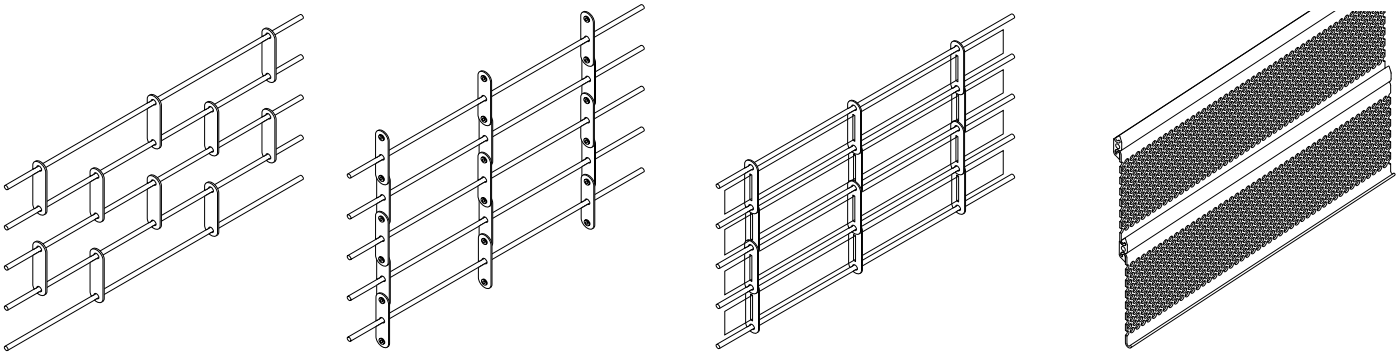

Note: These products allow air infiltration and are not weather tight.

Benefits

Choice of aluminum, galvanized or stainless steel

The Model 670 features an aluminum curtain, with optional fire-retardant polycarbonate inserts.

The Model 671 is fabricated of galvanized steel. Stainless steel and fire retardant polycarbonate inserts are also options. The standard curtain pattern for both the Model 670 and 671 is a straight lattice configuration. A staggered brick design is optional.

The Model 674 features a perforated aluminum curtain that provides increased security, visibility and light infiltration in an attractive design. Ideal for interior applications, the aluminum construction of the Model 674 is lightweight - while the perforated design enhances security without hindering air infiltration and visibility.

High-performance, low maintenance

The counterbalance assembly features heavy-duty helical torsion springs in a steel tube or pipe barrel to provide long and reliable service. Guides feature silicon woolpile strips or PVC inserts for ease of operation and noise reduction. Surfaces are factory pre-finished to minimize field preparation and enhance the durability of the finish. Optional crank or electric motor further simplifies grille operation. An optional heavy usage package (670, 671) provides extended life in applications requiring higher cycles, such as parking garages and service access gates.

Optional electric operation

Available with an electric operator to provide automatic passage for a variety of commercial and industrial uses, including schools, hospitals, libraries, public access buildings and parking garages.

Our commercial operators are designed to work with these grilles to ensure precise, smooth and safe operation.

Options include:

- Entrapment protection, including monitored photocells or monitored safety edge
- Emergency egress operator allows for for remote activation and notification of power failure
- Push-button, key or combination stations; surface or flush-mounted for interior or exterior locations
- Vehicle detectors, key card readers, door timer controls
- Treadle or pull-switch stations
- Keypad entry

Emergency egress options

For public building applications an emergency egress may be necessary to prevent entrapment in the event of emergency or power failure. Hospitals, schools, office buildings and libraries are ideal for adding this safety option to the door system. In the event of an alarm condition or power failure, the emergency egress operator option allows for safe pedestrian exit. This feature avoids entrapment as well as provides immediate access to emergency personnel. We offer two ways to implement the emergency egress option. Both methods meet IBC 2018 402.8.8 Security Grilles and Doors, IBC 2018 1010.1.4.5 Security Grilles, and DASMA TDS355 Access Controlled Egress Doors standards. One option is the auto unlock and auto release option using an egress electric operator system designed specifically to work with Overhead Door™ emergency egress (670, 671). The other option is the auto unlock and manual release which can be operated with standard and heavy-duty Overhead Door® commercial operators.

Face-of-wall Mounted

Grille clearance elevation

Operation: Push-up, chain hoist, crank or electric.

For clearance details on electrically operated grilles, see motor operator details on page 15.

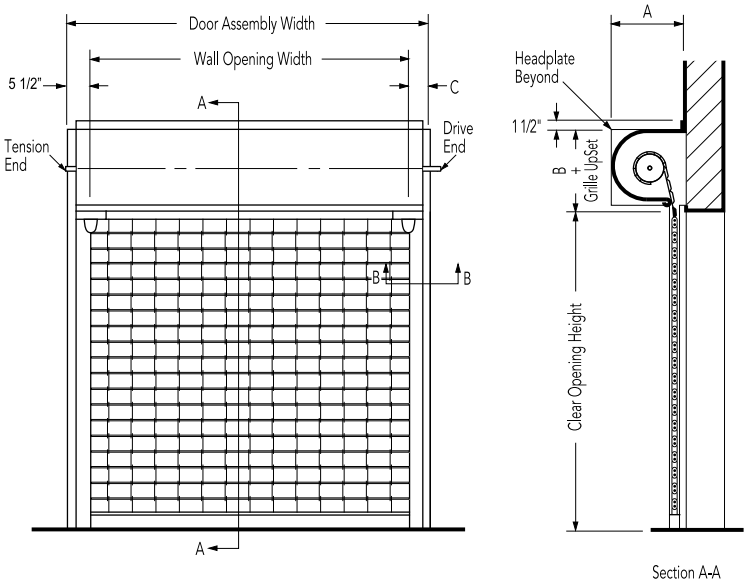

Headroom and sideroom clearance dimensions

Dimensions A and B	Models 670/671	
Opening Height	A	B
Thru 6'7" (2006 mm)	15" (381 mm)	16" (406 mm)
Thru 10'10" (3302 mm)	17" (432 mm)	18" (457 mm)
Thru 15'10" (4826 mm)	19" (483 mm)	20" (508 mm)
Thru 19'6" (5944 mm)	21" (533 mm)	22" (559 mm)
Thru 22'6" (6858 mm)	23" (584 mm)	24" (610 mm)
Thru 24'0" (7315 mm)	25" (609 mm)	26" (660 mm)

Grille Upsets	Models 670/671			
	Manual w/o weather strip	Manual with weather strip	Electric w/o safety edge	Electric with safety edge
Double angle bottom bar	1 3/4" (45 mm)	2 3/4" (70 mm)	3 3/4" (95 mm)	5 1/4" (133 mm)
Tubular	2 1/2" (64 mm)	3 3/4" (95 mm)	4 3/4" (121 mm)	6 1/4" (159 mm)
Extruded "T"	1 3/4" (45 mm)	2 3/4" (70 mm)	3 3/4" (95 mm)	5 1/4" (133 mm)

Dimension C	Models 670/671	
Operation	C	Add to A
Chain STD	9 1/4" (235 mm)	
F.O.H. chain	5 1/2" (140 mm)	+12" (305 mm)
Awning crank	5 1/2" (140 mm)	+10" (254 mm)
Push-Up	5 1/2" (140 mm)	
Electric model RMZ®	9 1/4" (235 mm)	
Electric model RSX®	9 1/4" (235 mm)	
Electric model RHX® (standard mounting)	7 " (178 mm)	
Electric model RHX® (3" sideroom bracket mounting)	5 1/2" (140 mm)	

Face-of-wall mounted guide details (Section B-B)

Wood jamb

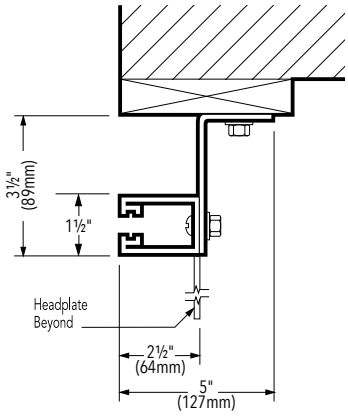

Masonry/concrete jamb

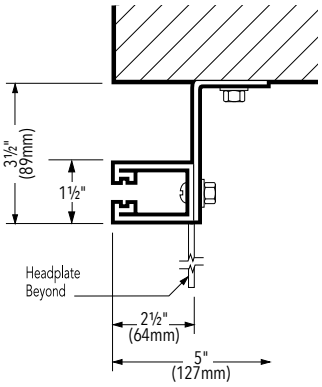

Steel jamb

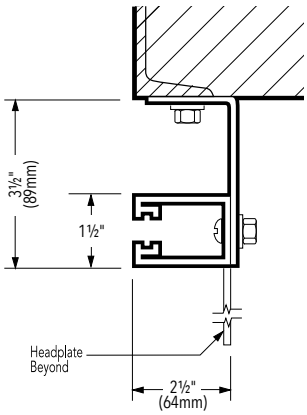

Steel tube jamb

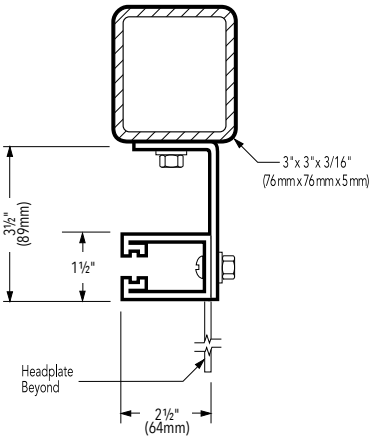

Steel tube requires coping out for drive clearance on crank or motor operated grilles.

Between Jambs Mounted

Grille clearance elevation

Operation: Push-up, chain hoist, crank or electric.

For clearance details on electrically operated grilles, see motor operator details on page 15.

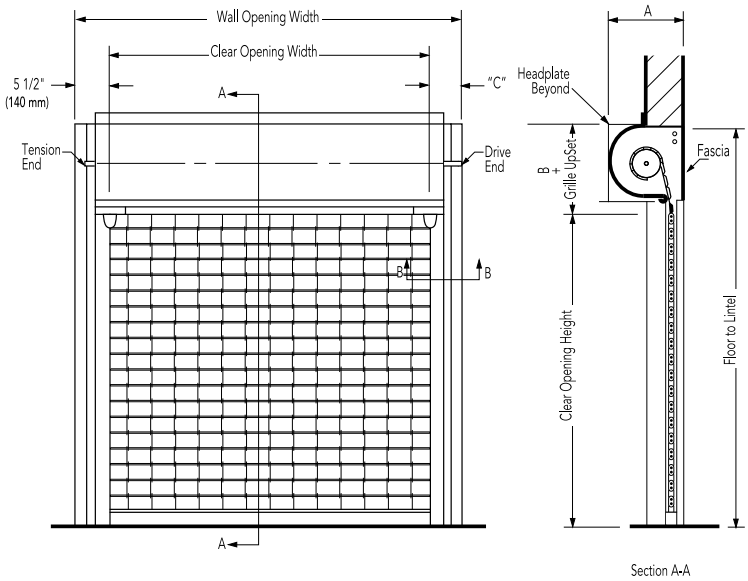

Headroom and sideroom clearance dimensions

Dimensions A and B	Models 670/671	
Opening Height	A	B
Thru 6'7" (2006 mm)	15" (381 mm)	16" (406 mm)
Thru 10'10" (3302 mm)	17" (432 mm)	18" (457 mm)
Thru 15'10" (4826 mm)	19" (483 mm)	20" (508 mm)
Thru 19'6" (5944 mm)	21" (533 mm)	22" (559 mm)
Thru 22'6" (6858 mm)	23" (584 mm)	24" (610 mm)
Thru 24'0" (7315 mm)	25" (609 mm)	26" (660 mm)

Grille Upsets	Models 670/671			
	Manual w/o weather strip	Manual with weather strip	Electric w/o safety edge	Electric with safety edge
Double angle bottom bar	1 3/4" (45 mm)	2 3/4" (70 mm)	3 3/4" (95 mm)	5 1/4" (133 mm)
Tubular	2 1/2" (64 mm)	3 3/4" (95 mm)	4 3/4" (121 mm)	6 1/4" (159mm)
Extruded "T"	1 3/4" (45 mm)	2 3/4" (70 mm)	3 3/4" (95 mm)	5 1/4" (133 mm)

Dimension C	Models 670/671	
Operation	C	Add to A
Chain STD	9 1/4" (235 mm)	
F.O.H. chain	5 1/2" (140 mm)	+12" (305 mm)
Awning crank	5 1/2" (140 mm)	+10" (254 mm)
Push-Up	5 1/2" (140 mm)	
Electric model RMX®	9 1/4" (235 mm)	
Electric model RSX®	9 1/4" (235 mm)	
Electric model RHX®	5 1/2" (140 mm)	

Between jambs mounted guide details (Section B-B)

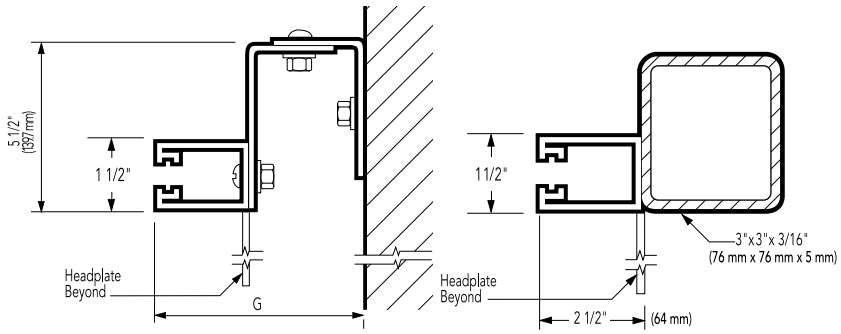

Steel tube requires coping out. Consult factory for dimensions.

Door clearance dimensions

Dimension G*	Models 670/671
Operation	G
F.O.H. chain	5 1/2" (140 mm)
Awning crank	5 1/2" (140 mm)
Push-Up	5 1/2" (140 mm)
Electric model RSX®	9 1/4" (235 mm)
Electric model RHX®	5 1/2" (140 mm)

* For max. door opening height

MODELS 671S

Provides customers with high cycle performance, security, durability, maximized air movement and visual access while delivering a reliable system, minimizing downtime with ease of serviceability. The springless design builds on the proven construction of the Overhead Door™ Rolling Security Grille line, adding significant enhancements to provide 15 times the standard cycle life.

Standard Features at a Glance

Max. height	14'4" (4,369 mm)*
Max. width	30'0" (9,144 mm)*
Curtain	Galvanized steel links and solid rods with mill aluminum spacer tube
Curtain pattern	Straight lattice 9" center vertical links with 2" center rod spacing
Door roll	Directly driven, springless roll with integral shaft; Self-aligning greaseable sealed bearings; Door does not require counterbalance device
Hood	24-gauge galvanized steel primed; Matching motor and end cover provided
High Usage Guides	Three structural steel angles with UHMW wear strips and PowderGuard® Premium powder coat finish in black
Bottom bar	Tubular extruded aluminum with mill finish
Standard mounting	Interior or exterior face of wall
Operation	Direct drive integrated gear/motor/brake assembly; drive assembly and limit sensors are factory pre-assembled; Manual hand chain for power outage. Horsepower is appropriate to door size/weight; 230V AC 3-phase motor
Control panel	Electronic controller with microprocessor self-diagnostics. Digital readout indicates door action, alarm conditions, and fault conditions. Time delay self-close timer and non-resettable cycle counter is included. Enclosure is IP54 rated (NEMA 3 equivalent).
Actuator	Single open/close/stop push button station incorporated into control panel
Safety features	Built-in braking mechanism; Photoelectric safety sensors with guards
Limited warranty	24 month, 300,000 cycles

Options

Motor options**	208V AC 1PH+, 220V AC 1PH, 208V AC 3PH+, 230V AC 3PH, 460V AC 3 PH+, 575V AC 3PH+ *(+ Requires stand-alone mounted transformer; provided based on desired voltage consult factory.)*
Curtain pattern	Brick 9" on center vertical links with 2" on center rods spacing
Curtain material	Mill aluminum link, galvanized steel solid rod, with mill aluminum spacer tube; Clear anodized aluminum link, galvanized steel solid rod, and clear anodized aluminum spacer tube; #4 or #2B stainless steel link, solid rod, and spacer tube and PowderGuard® Premium finish.
Guides	PowderGuard® Premium finish, PowderGuard® Zinc or Textured finish
Hood	PowderGuard® Premium or PowderGuard® Textured finish; stainless steel with #4 brush finish; anodized or mill finish aluminum
Safety devices	Monitored electric sensing edge; additional set of photoelectric sensors
Control panel	IP65 (NEMA 4/4X equivalent) control panel
Actuators	Push buttons, loop detectors, radio control, motion detectors or any combination thereof available for door operation/control

* Dependent upon the curtain material and pattern. Consult factory for sizes not listed above.

** If the voltage is too low a transformer may be needed. Larger doors may not be available with 1-phase power. Consult factory for information.

Grille Data and Pattern

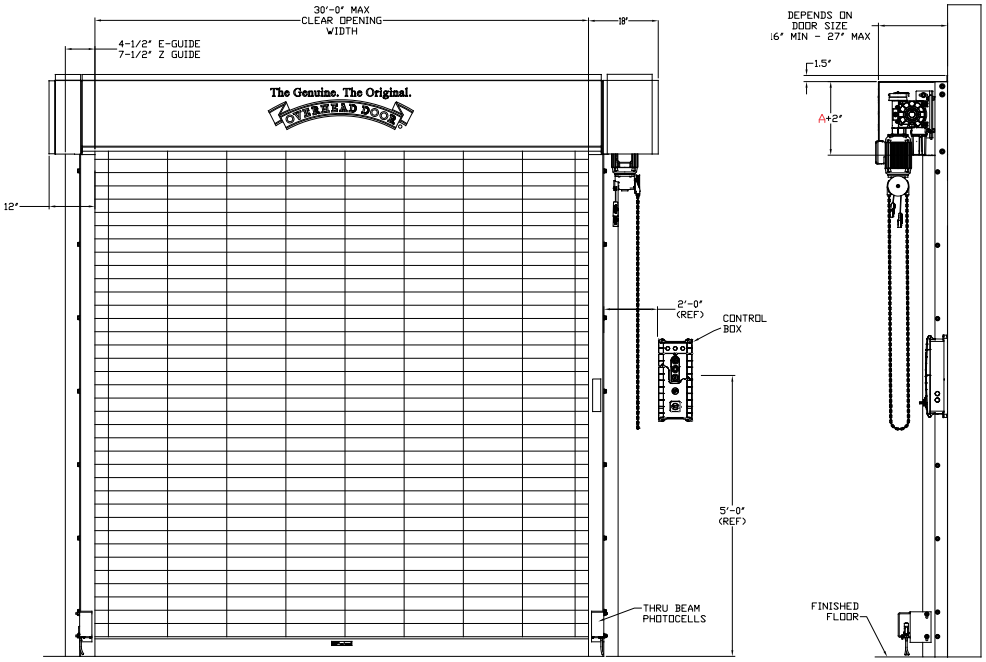

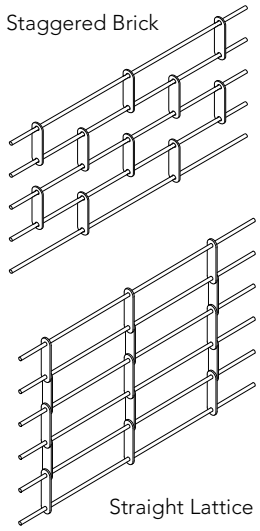

Wall opening height	Dimension A
Thru 6'	14"
Thru 10'	16"
Thru 14'	18"

Staggered Brick pattern

Benefits

- Springless operation eliminates the need for a counterbalance
- 300,000 cycle life performance and functionality with minimum maintenance requirements
- The continuous rod curtain design combined with the high strength curtain materials increases the durability and security of this grille system
- Universal components for ease of maintenance
- Floor-level controller for ease of access control and maintenance
- Direct drive integrated gear/motor/brake assembly; built-in braking mechanism provides additional peace-of-mind against uncontrolled curtain travel
- Field-installable accessories such as radio controls or motion detectors to match a wide range of application requirements
- 24 month limited warranty on door system

MODEL 676

Advanced performance in industrial, security and general commercial applications where tenants' security, long term asset value and minimized interruption to facility access are primary concerns. Recommended for parking garages, industrial manufacturing facilities, government and public facilities.

Standard Features at a Glance

Max. standard height	14'4" (4,369 mm)*
Max. standard width	30'4" (9,246 mm)*
Curtain	Galvanized steel links and rods with mill aluminum spacer tube
Curtain pattern	Straight lattice 9" center vertical links with 2" center rod spacing
Door roll	Directly driven, springless steel tube roll with integral shafts, keyed on the drive end and supported by self-aligning greaseable sealed bearings
Hood	24 gauge black painted steel
Guides	Three structural steel angles with PowderGuard® Premium powder coat in black
Bottom bar	Tubular extruded aluminum with mill finish
Standard mounting	Face of wall
Operation	Direct drive integrated gear/motor/brake assembly (up to 24" per second up speed / 12" per second down speed); Drive assembly and limit sensors are factory pre-assembled. Manual hand chain for power outage. Horsepower is appropriate to door size/weight; 230V AC 3-phase motor
Control panel	NEMA 4X rated; variable frequency drive, self-diagnostics, built-in cycle counter, and timer to close
Safety features	Built-in braking mechanism, photoelectric sensors with commercial grade guards, wireless, monitored sensing edge, motor cover
Limited warranty	60-month on motor; 24-month/300,000 cycles on door components

Options

Motor options:	208V AC 1PH+, 220V AC 1PH, 208V AC 3PH+, 230V AC 3PH, 460V AC 3 PH, 575V AC 3PH+ *(+ Requires stand-alone mounted transformer; provided based on desired voltage consult factory..)*
Curtain pattern:	Brick 9" on center vertical links with 2" on center rods spacing
Curtain material:	Mill aluminum link, galvanized steel rod, with mill aluminum spacer tube; Clear anodized aluminum link, galvanized steel rod, and clear anodized aluminum spacer tube; PowerGuard®, #4 or #2B stainless steel link, rod, and spacer tube
Guides:	PowderGuard® Premium finish PowderGuard® Zinc or Textured finish
Hood:	24 gauge powder coated steel, stainless steel with brush finish, powder coated aluminum
Actuators:	Loop detectors, radio control, push buttons, motion detectors and pull cords (wireless accessories available)

* Dependent upon the curtain material and pattern. Consult factory for sizes not listed above.

Grille Data and Pattern

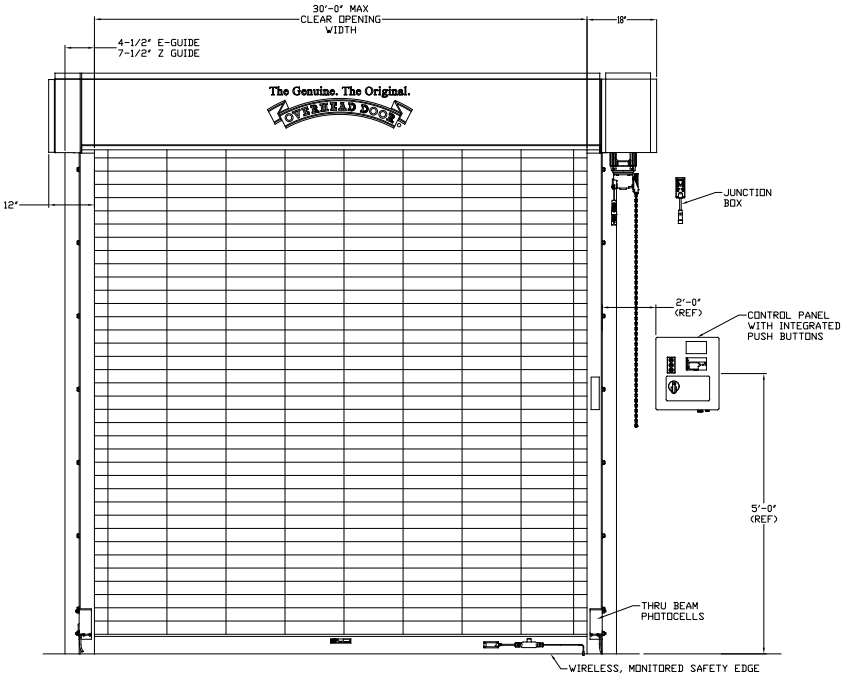

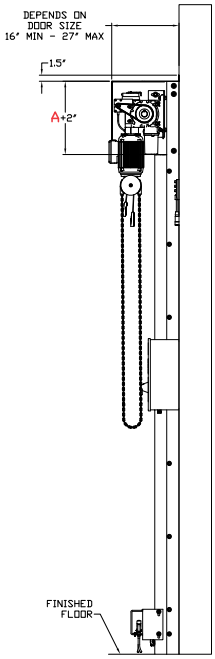

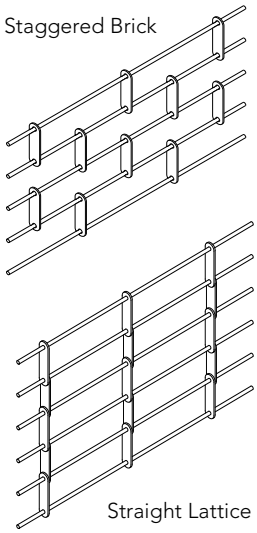

Wall opening height	Dimension A
Thru 6'	14"
Thru 10'	16"
Thru 14'	18"

Note: These products allow air infiltration and are not weather tight.

Benefits

The RapidGrille® Advanced Performance Security Grille provides facilities with maximized air movement and visual access while delivering more safety features than a standard security grille. The reliable springless design and operation provides reliable performance and asset longevity.

The continuous rod design combined with the high strength curtain materials of the RapidGrille® AP increases the durability and security of this system.

Electric Operators

We offer a broad line of electric operators to suit new construction and retrofit applications, as well as unusual or special requirements. In order to improve safety and enhance door and motor life, industry quality assurance guidelines recommend the choice of a single manufacturer for both door and operator applications.

We are one of the only national manufacturers to offer a full line of commercial and industrial doors and operators specifically designed for integral applications.

Model RHX®

Model RHX® is a heavy duty commercial operator designed to operate grilles up to 24' (7315 mm) in height and 3696 pounds (1676 kg).

Model RSX®

Model RSX® is a standard duty commercial operator designed to operate grilles up to 24' (7315 mm) in height and 1620 pounds (735 kg). It offers unique features like LimitLock®, SuperBelt™ and 16 digit menu setup.

Model RMZ®

Model RMZ® Hoist is designed for high or full-lift sectional and rolling doors that have a limited duty cycle requirement. Advanced features and robust mechanical design combine to provide a mediumduty operator that is the new standard in the industry.

Model CDX®

Model CDX® is a gear-reduced commercial operator with a 1/2 HP motor. It may be used for grilles up to 140 sq. ft. (13006 sq.mm). Mounting is front-of-hood only.

Operator Control Options

- Entrapment protection: monitored electric sensing edge or photoelectric sensors
- Ground-level chain hoists for emergency or hand operation standard on Model RMZ®
- Push-button, key or combination stations; surface-or flush-mounted for interior and/or exterior locations
- Vehicle detectors, photocell and door timer controls
- Treadle or pull switch stations
- Wireless keypad entry
- Universal programmable door timer

Safety and Entrapment Recommendations

We strongly recommend the use of interlock switches, an electrically-controlled emergency egress option, and a monitored electric safety edge for all electrically operated upward coiling grilles. If a sensing edge or other reversing device is not installed, a constant-contact control switch will be used to close the grille. We recommend a self-monitoring, two-wire, fail-safe electric sensing edge.

Mounting Details

Front-of-hood mounted -RHX®

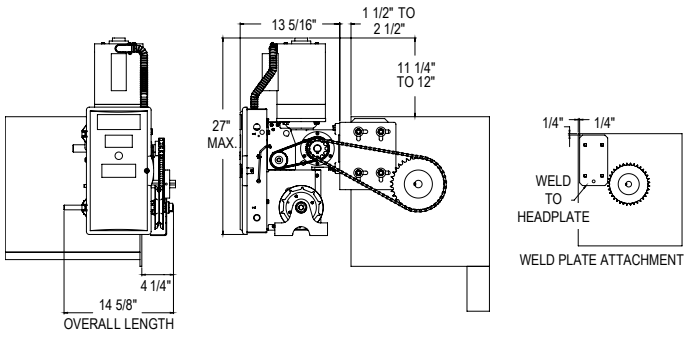

Front-of-hood-RSX®

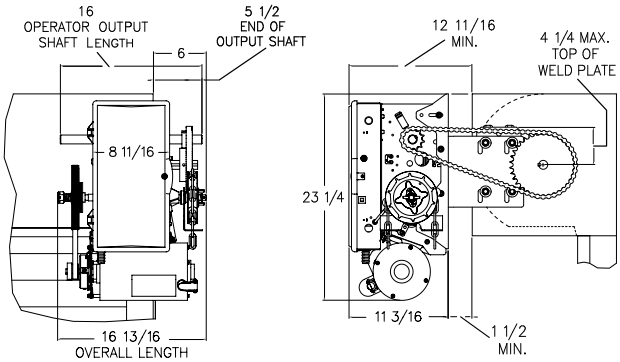

Top-of-hood mounted -RHX®

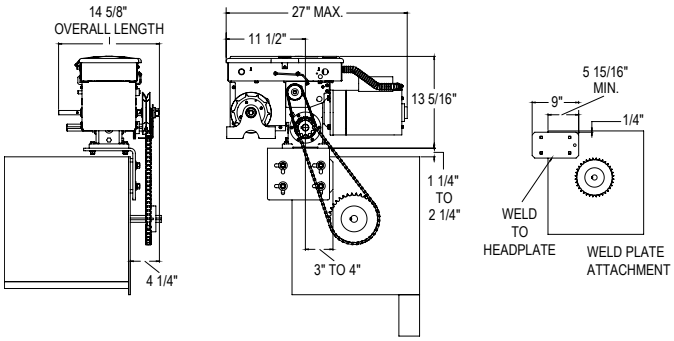

Top-of-hood-RSX®

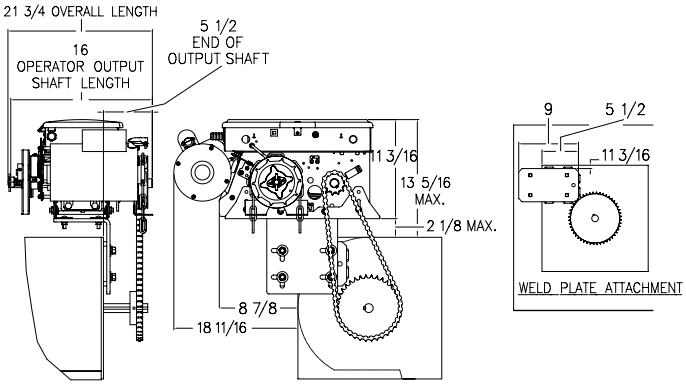

Wall mounted (below shaft)-RHX®

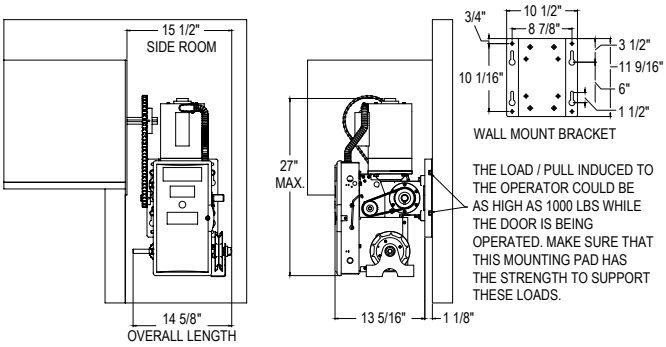

Wall mount-RSX®

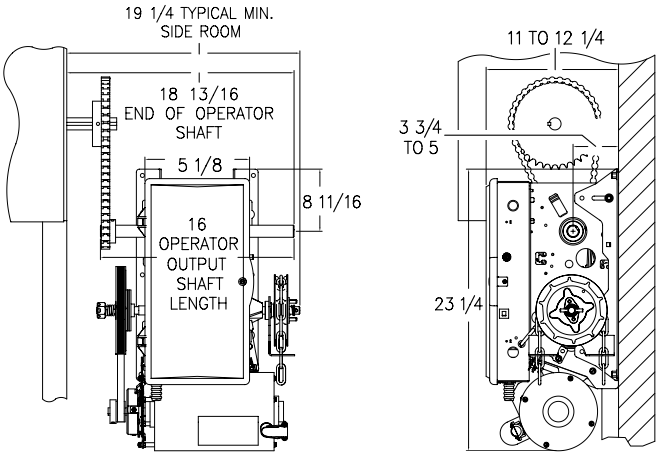

Note: For "A" and "G" dimensions, refer to Headroom and Guide Clearance. Dimension charts applicable to grille type selected.
* Front-of-Hood mounted also available on between jambs mounted grilles.

For more detailed information, visit our Architects Corner at **overheaddoor.com/architect-corner** or consult your local Overhead Door™ Distributor.

Model 670, black, anodized.

Architect's Corner

A resource for architects, containing comprehensive technical and resource materials to support your project, including drawings and specifications for commercial doors.

www.overheaddoor.com

The original, innovative choice for unequalled quality and service.

Overhead Door Corporation pioneered the sectional garage door industry, inventing the first sectional garage door in 1921 and the first electric door operator in 1926. Today, we continue to be the industry leader through the strength of our product innovation, superior craftsmanship and outstanding customer support, underscoring a legacy of quality, expertise and integrity. That's why design and construction professionals specify Overhead Door™ products more often than any other brand. Our family of over 400 Overhead Door™ Distributors across the U.S. and Canada not only share our name and logo, but also our commitment to excellence.

OVERHEAD DOOR®

INDUSTRY LEADING
COMMERCIAL & INDUSTRIAL SOLUTIONS

2501 S. State Hwy. 121 Bus., Suite 200, Lewisville, TX 75067
1-800-929-DOOR • sales@overheaddoor.com
overheaddoor.com

©2024 Overhead Door Corporation. Overhead Door ia a trademark and RHX, RSX, RMX, CDXl and the Red Ribbon logo are registered trademarks of Overhead Door Corporation. All other trademarks are property of their rightful owners. Consistent with our policy of continuing product improvement, we reserve the right to change product specifications without notice or obligation. C900-1268 10/24