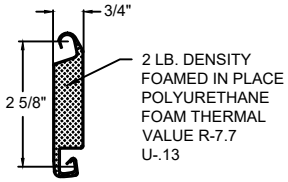

F-265I SLAT DETAIL

OPTIONS	
OPENING WIDTH	
OPENING HEIGHT	
GUIDE OPTIONS	☐ E GUIDE ☐ Z GUIDE
HOOD OPTIONS	☐ INTERIOR OCTOGON ☐ INTERIOR ROUND ☐ INTERIOR SQUARE ☐ EXTERIOR SLOPED

MODEL	STANDARD MAX. VALUES	
	WIDTH	HEIGHT
625S	30'	20'

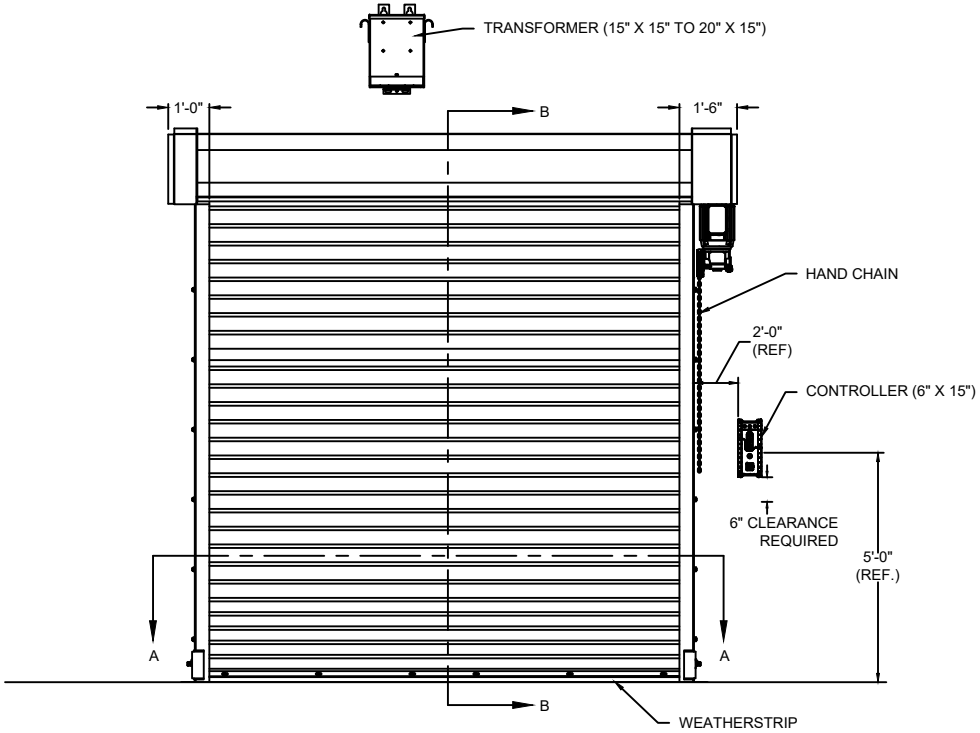

ELEVATION

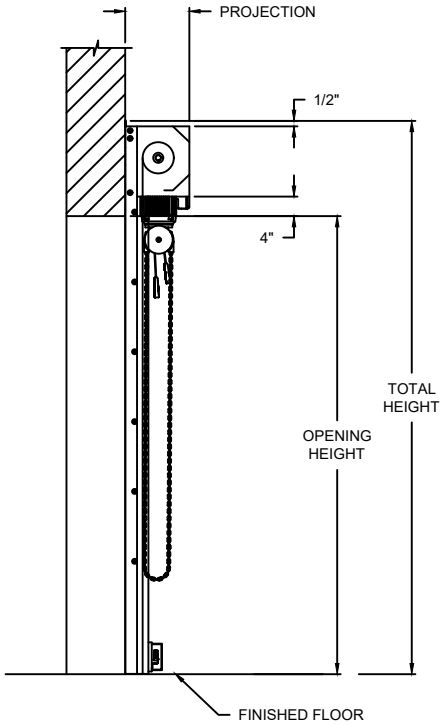

SECTION B-B

PROJECTION	
MIN.	MAX.
12" X 14"	26" X 28"

SECTION A-A

COMPONENT	MATERIAL	OPERATION	NOTES:
HOOD	24 GA. GALVANIZED STEEL	MOTOR RH 208V 1-PHASE 60HZ VIA TRANSFORMER (190-207 V RANGE)	1. WINDLOAD 20 P.S.F
CURTAIN	GALVANIZED STEEL		
GUIDES	STEEL ANGLES		
BOTTOM BAR	STEEL ANGLES		

EVERSERVE®

625S HEAVY DUTY STORMTITE™ INSULATED
SPRINGLESS SERVICE DOOR

DWG. NO.	DATE:	The Genuine. The Original.
SHEET	BY:	

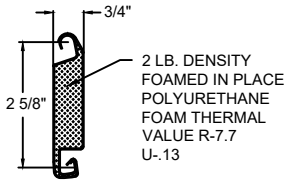

F-265I SLAT DETAIL

OPTIONS	
OPENING WIDTH	
OPENING HEIGHT	
GUIDE OPTIONS	☐ E GUIDE ☐ Z GUIDE
HOOD OPTIONS	☐ INTERIOR OCTOGON ☐ INTERIOR ROUND ☐ INTERIOR SQUARE ☐ EXTERIOR SLOPED

MODEL	STANDARD MAX. VALUES	
	WIDTH	HEIGHT
625S	30'	20'

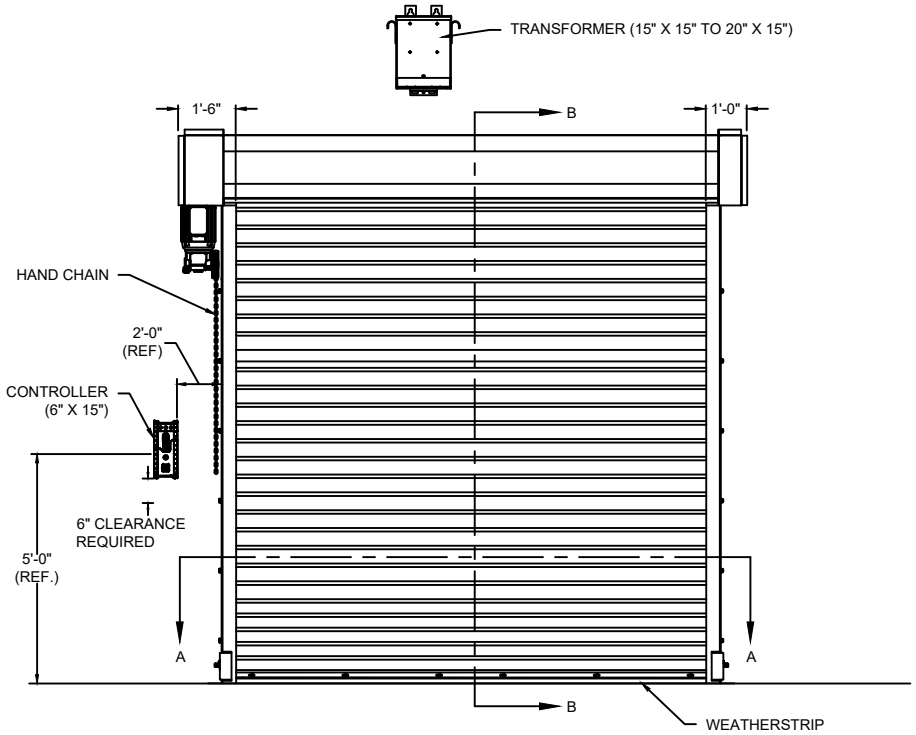

ELEVATION

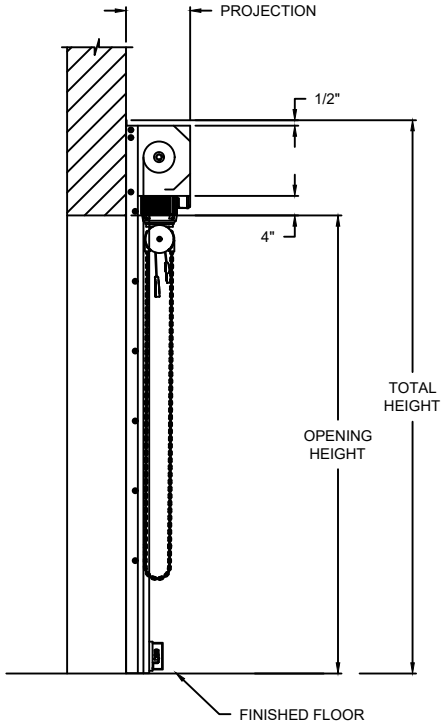

SECTION B-B

PROJECTION	
MIN.	MAX.
12" X 14"	26" X 28"

SECTION A-A

COMPONENT	MATERIAL	OPERATION	NOTES:
HOOD	24 GA. GALVANIZED STEEL	MOTOR LH 208V 1-PHASE 60HZ VIA TRANSFORMER (190-207 V RANGE)	1. WINDLOAD 20 P.S.F
CURTAIN	GALVANIZED STEEL		
GUIDES	STEEL ANGLES		
BOTTOM BAR	STEEL ANGLES		

EVERSERVE®

625S HEAVY DUTY STORMTITE™ INSULATED
SPRINGLESS SERVICE DOOR

DWG. NO.	DATE:	The Genuine. The Original.
SHEET	BY:	

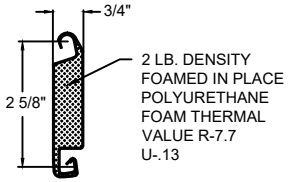

F-265I SLAT DETAIL

OPTIONS	
OPENING WIDTH	
OPENING HEIGHT	
GUIDE OPTIONS	☐ E GUIDE ☐ Z GUIDE
HOOD OPTIONS	☐ INTERIOR OCTOGON ☐ INTERIOR ROUND ☐ INTERIOR SQUARE ☐ EXTERIOR SLOPED

MODEL	STANDARD MAX. VALUES	
	WIDTH	HEIGHT
625S	30'	20'

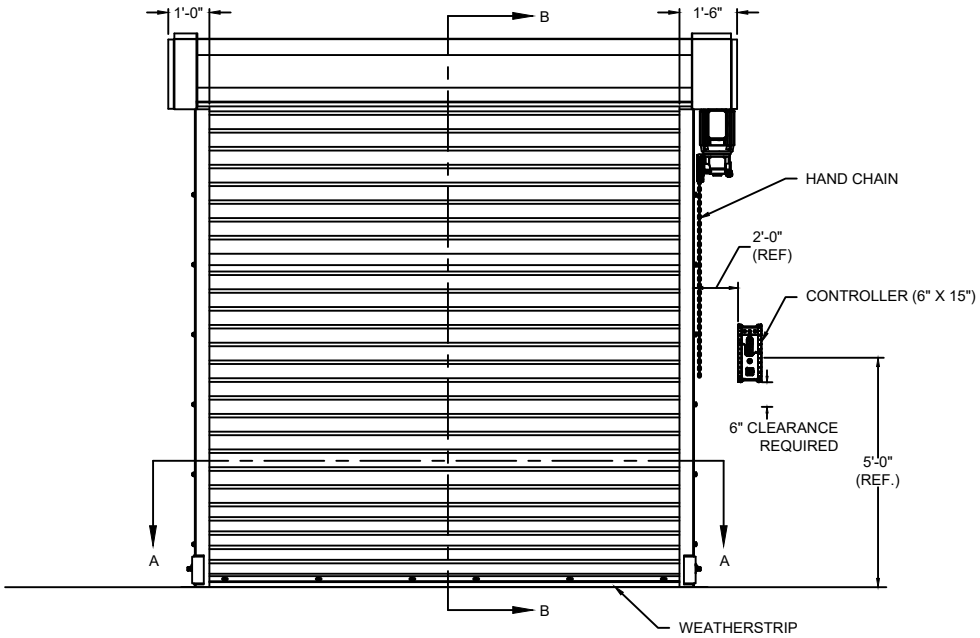

ELEVATION

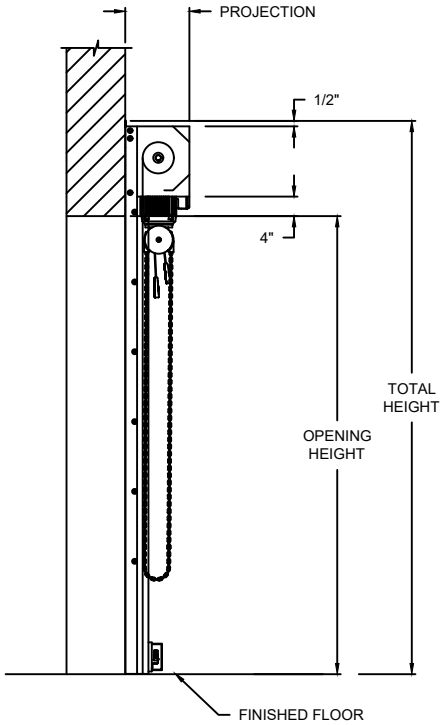

SECTION B-B

PROJECTION	
MIN.	MAX.
12" X 14"	26" X 28"

SECTION A-A

COMPONENT	MATERIAL	OPERATION	NOTES:
HOOD	24 GA. GALVANIZED STEEL	MOTOR RH 230V 1-PHASE 60HZ VIA (208-245 V RANGE)	1. WINDLOAD 20 P.S.F
CURTAIN	GALVANIZED STEEL		
GUIDES	STEEL ANGLES		
BOTTOM BAR	STEEL ANGLES		

EVERSERVE®

625S HEAVY DUTY STORMTITE™ INSULATED
SPRINGLESS SERVICE DOOR

DWG. NO.	DATE:	The Genuine. The Original.
SHEET	BY:	

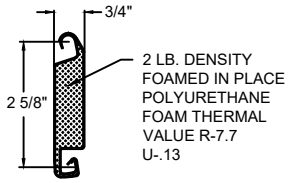

F-265I SLAT DETAIL

OPTIONS	
OPENING WIDTH	
OPENING HEIGHT	
GUIDE OPTIONS	☐ E GUIDE ☐ Z GUIDE
HOOD OPTIONS	☐ INTERIOR OCTOGON ☐ INTERIOR ROUND ☐ INTERIOR SQUARE ☐ EXTERIOR SLOPED

MODEL	STANDARD MAX. VALUES	
	WIDTH	HEIGHT
625S	30'	20'

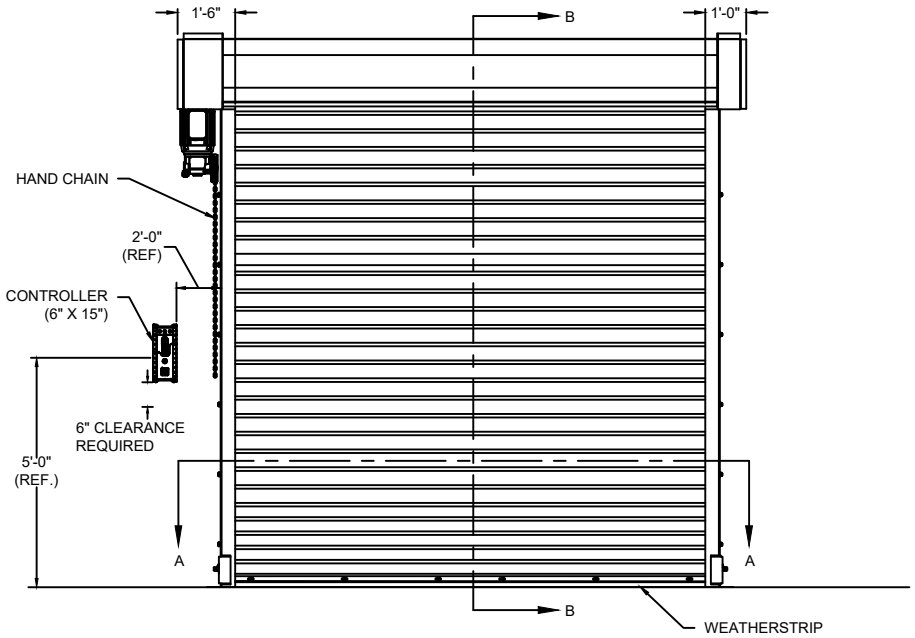

ELEVATION

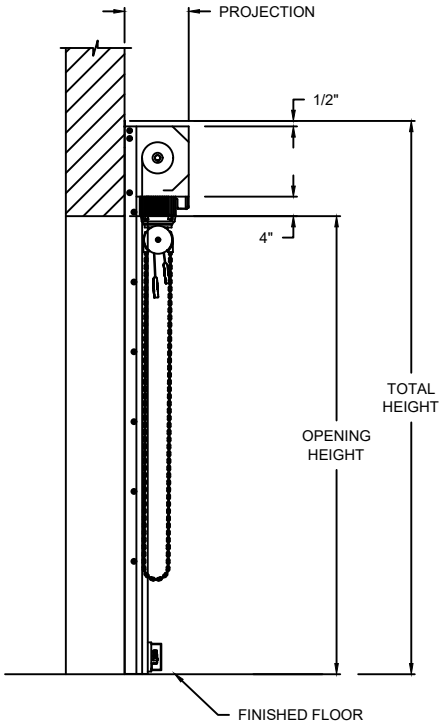

SECTION B-B

PROJECTION	
MIN.	MAX.
12" X 14"	26" X 28"

SECTION A-A

COMPONENT	MATERIAL	OPERATION	NOTES:
HOOD	24 GA. GALVANIZED STEEL	MOTOR LH 230V 1-PHASE 60HZ VIA (208-245 V RANGE)	1. WINDLOAD 20 P.S.F
CURTAIN	GALVANIZED STEEL		
GUIDES	STEEL ANGLES		
BOTTOM BAR	STEEL ANGLES		

EVERSERVE®

625S HEAVY DUTY STORMTITE™ INSULATED SPRINGLESS SERVICE DOOR

DWG. NO.	DATE:	The Genuine. The Original.
SHEET	BY:	

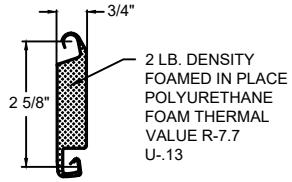

F-265I SLAT DETAIL

OPTIONS	
OPENING WIDTH	
OPENING HEIGHT	
GUIDE OPTIONS	☐ E GUIDE ☐ Z GUIDE
HOOD OPTIONS	☐ INTERIOR OCTOGON ☐ INTERIOR ROUND ☐ INTERIOR SQUARE ☐ EXTERIOR SLOPED

MODEL	STANDARD MAX. VALUES	
	WIDTH	HEIGHT
625S	30'	20'

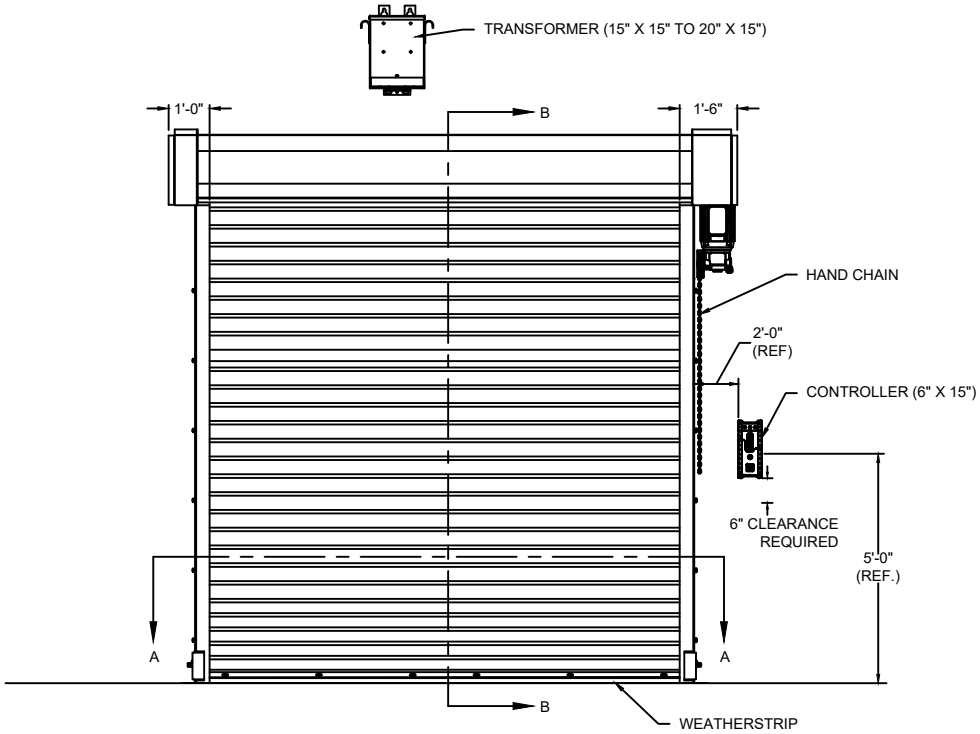

ELEVATION

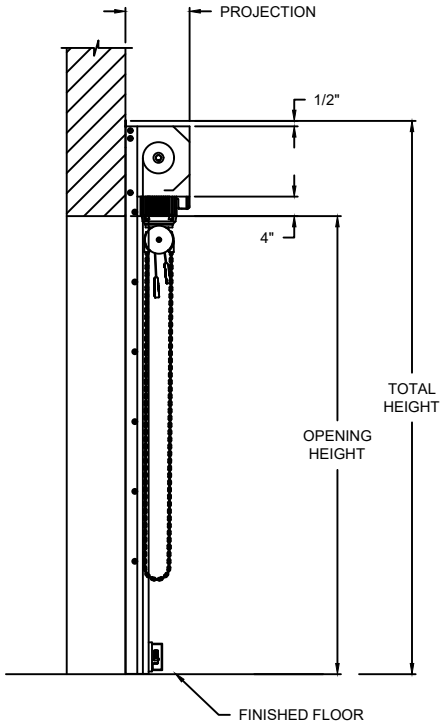

SECTION B-B

PROJECTION	
MIN.	MAX.
12" X 14"	26" X 28"

SECTION A-A

COMPONENT	MATERIAL	OPERATION	NOTES:
HOOD	24 GA. GALVANIZED STEEL	MOTOR RH 208V 3-PHASE 60HZ VIA TRANSFORMER (190-207 V RANGE)	1. WINDLOAD 20 P.S.F
CURTAIN	GALVANIZED STEEL		
GUIDES	STEEL ANGLES		
BOTTOM BAR	STEEL ANGLES		

EVERSERVE®

625S HEAVY DUTY STORMTITE™ INSULATED
SPRINGLESS SERVICE DOOR

DWG. NO.	DATE:	The Genuine. The Original.
SHEET	BY:	

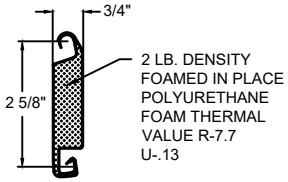

F-265I SLAT DETAIL

OPTIONS	
OPENING WIDTH	
OPENING HEIGHT	
GUIDE OPTIONS	☐ E GUIDE ☐ Z GUIDE
HOOD OPTIONS	☐ INTERIOR OCTOGON ☐ INTERIOR ROUND ☐ INTERIOR SQUARE ☐ EXTERIOR SLOPED

MODEL	STANDARD MAX. VALUES	
	WIDTH	HEIGHT
625S	30'	20'

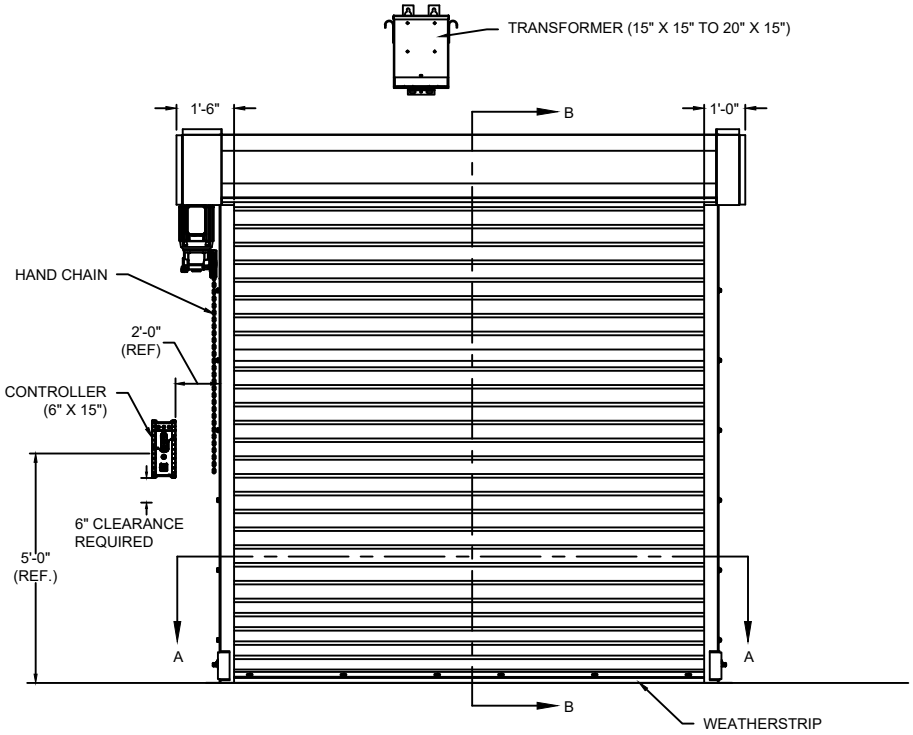

ELEVATION

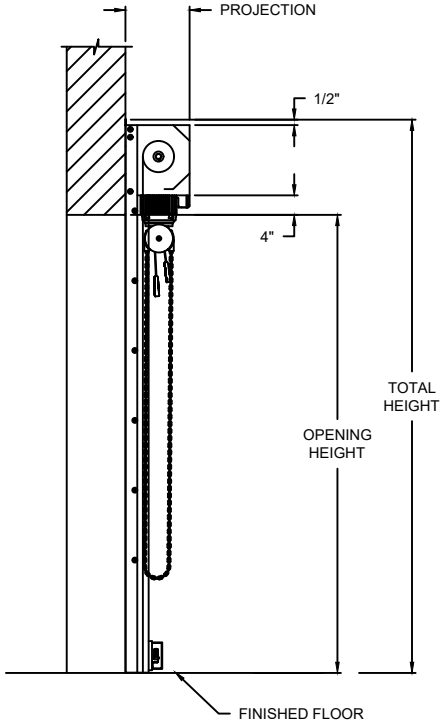

SECTION B-B

PROJECTION	
MIN.	MAX.
12" X 14"	26" X 28"

SECTION A-A

COMPONENT	MATERIAL	OPERATION	NOTES:
HOOD	24 GA. GALVANIZED STEEL	MOTOR LH 208V 3-PHASE 60HZ VIA TRANSFORMER (190-207 V RANGE)	1. WINDLOAD 20 P.S.F
CURTAIN	GALVANIZED STEEL		
GUIDES	STEEL ANGLES		
BOTTOM BAR	STEEL ANGLES		

EVERSERVE®

625S HEAVY DUTY STORMTITE™ INSULATED SPRINGLESS SERVICE DOOR

DWG. NO.	DATE:	The Genuine. The Original.
SHEET	BY:	

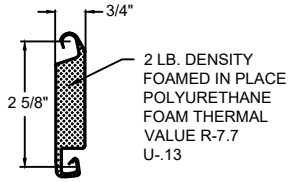

F-265I SLAT DETAIL

OPTIONS	
OPENING WIDTH	
OPENING HEIGHT	
GUIDE OPTIONS	☐ E GUIDE ☐ Z GUIDE
HOOD OPTIONS	☐ INTERIOR OCTOGON ☐ INTERIOR ROUND ☐ INTERIOR SQUARE ☐ EXTERIOR SLOPED

MODEL	STANDARD MAX. VALUES	
	WIDTH	HEIGHT
625S	30'	20'

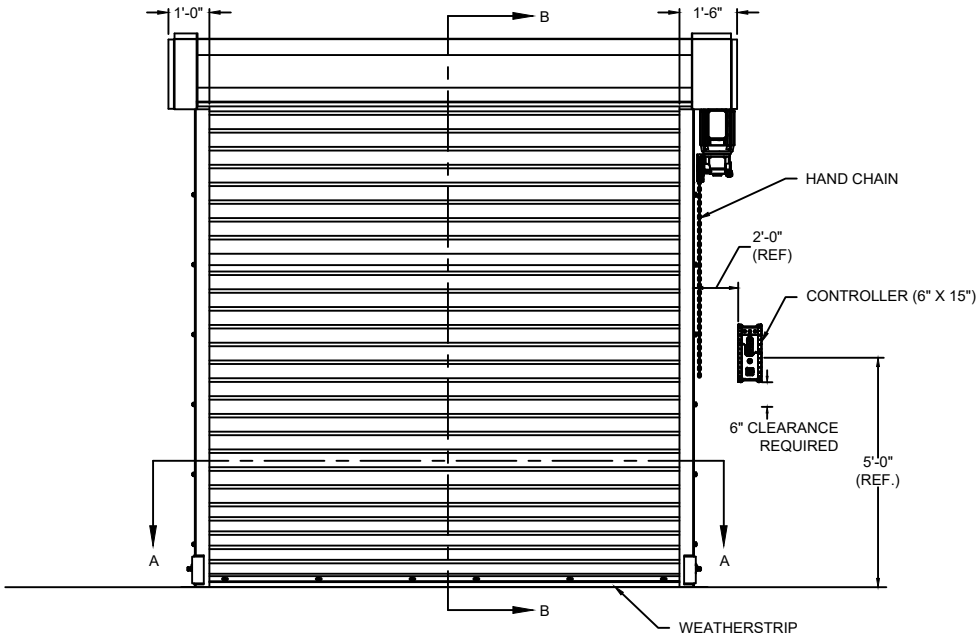

ELEVATION

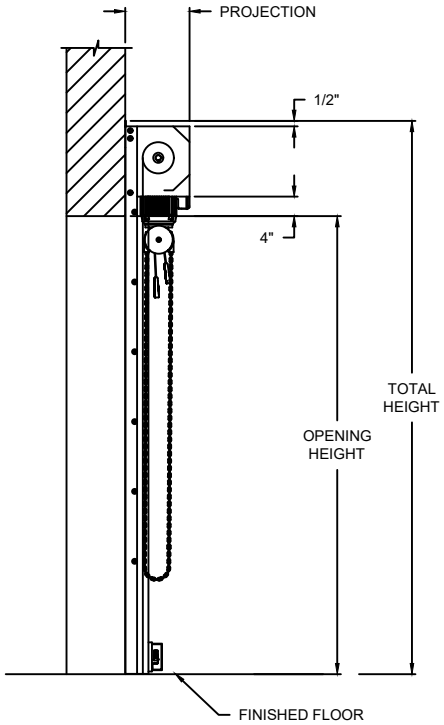

SECTION B-B

PROJECTION	
MIN.	MAX.
12" X 14"	26" X 28"

SECTION A-A

COMPONENT	MATERIAL	OPERATION	NOTES:
HOOD	24 GA. GALVANIZED STEEL	MOTOR RH 230V 3-PHASE 60HZ VIA TRANSFORMER (208-245 V RANGE)	1. WINDLOAD 20 P.S.F
CURTAIN	GALVANIZED STEEL		
GUIDES	STEEL ANGLES		
BOTTOM BAR	STEEL ANGLES		

EVERSERVE®

625S HEAVY DUTY STORMTITE™ INSULATED
SPRINGLESS SERVICE DOOR

DWG. NO.	DATE:	The Genuine. The Original.
SHEET	BY:	

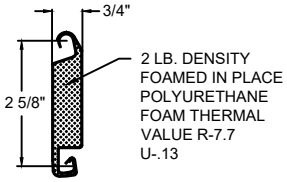

F-265I SLAT DETAIL

OPTIONS	
OPENING WIDTH	
OPENING HEIGHT	
GUIDE OPTIONS	☐ E GUIDE ☐ Z GUIDE
HOOD OPTIONS	☐ INTERIOR OCTOGON ☐ INTERIOR ROUND ☐ INTERIOR SQUARE ☐ EXTERIOR SLOPED

MODEL	STANDARD MAX. VALUES	
	WIDTH	HEIGHT
625S	30'	20'

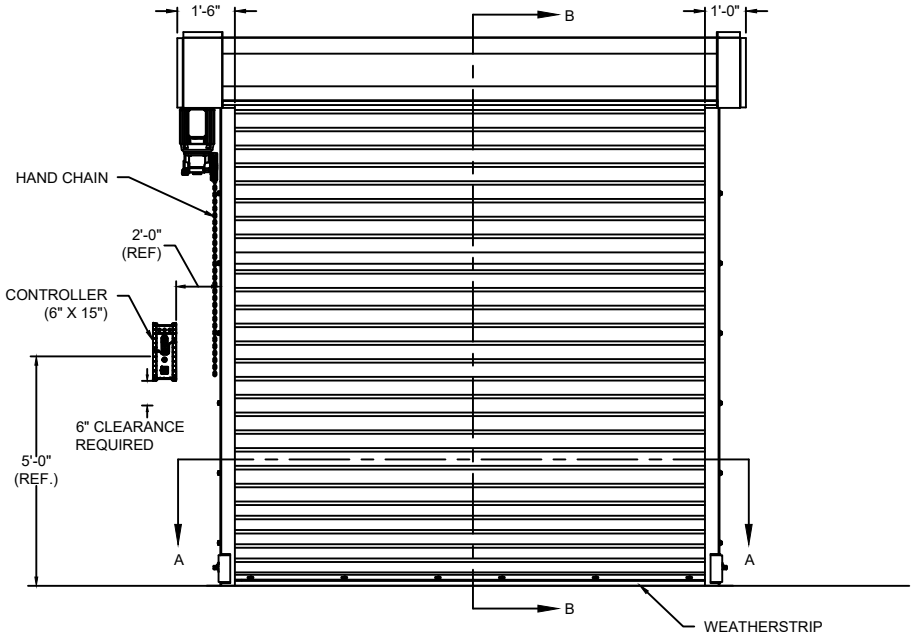

ELEVATION

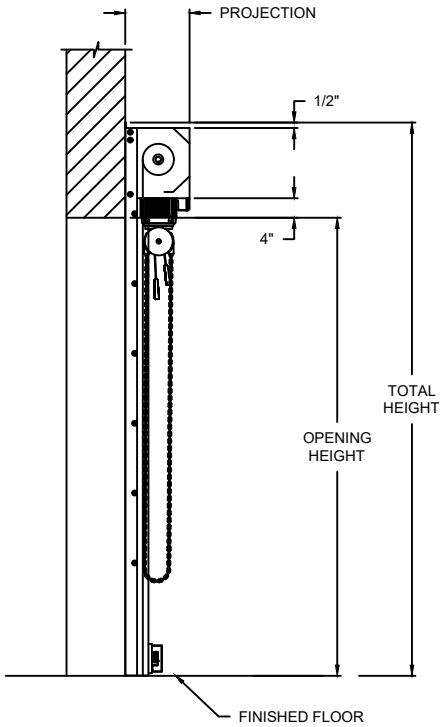

SECTION B-B

PROJECTION	
MIN.	MAX.
12" X 14"	26" X 28"

SECTION A-A

COMPONENT	MATERIAL	OPERATION	NOTES:
HOOD	24 GA. GALVANIZED STEEL	MOTOR LH 230V 3-PHASE 60HZ VIA TRANSFORMER (208-245 V RANGE)	1. WINDLOAD 20 P.S.F
CURTAIN	GALVANIZED STEEL		
GUIDES	STEEL ANGLES		
BOTTOM BAR	STEEL ANGLES		

EVERSERVE®

625S HEAVY DUTY STORMTITE™ INSULATED
SPRINGLESS SERVICE DOOR

DWG. NO.	DATE:	The Genuine. The Original.
SHEET	BY:	

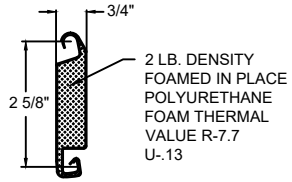

F-265I SLAT DETAIL

OPTIONS	
OPENING WIDTH	
OPENING HEIGHT	
GUIDE OPTIONS	☐ E GUIDE ☐ Z GUIDE
HOOD OPTIONS	☐ INTERIOR OCTOGON ☐ INTERIOR ROUND ☐ INTERIOR SQUARE ☐ EXTERIOR SLOPED

MODEL	STANDARD MAX. VALUES	
	WIDTH	HEIGHT
625S	30'	20'

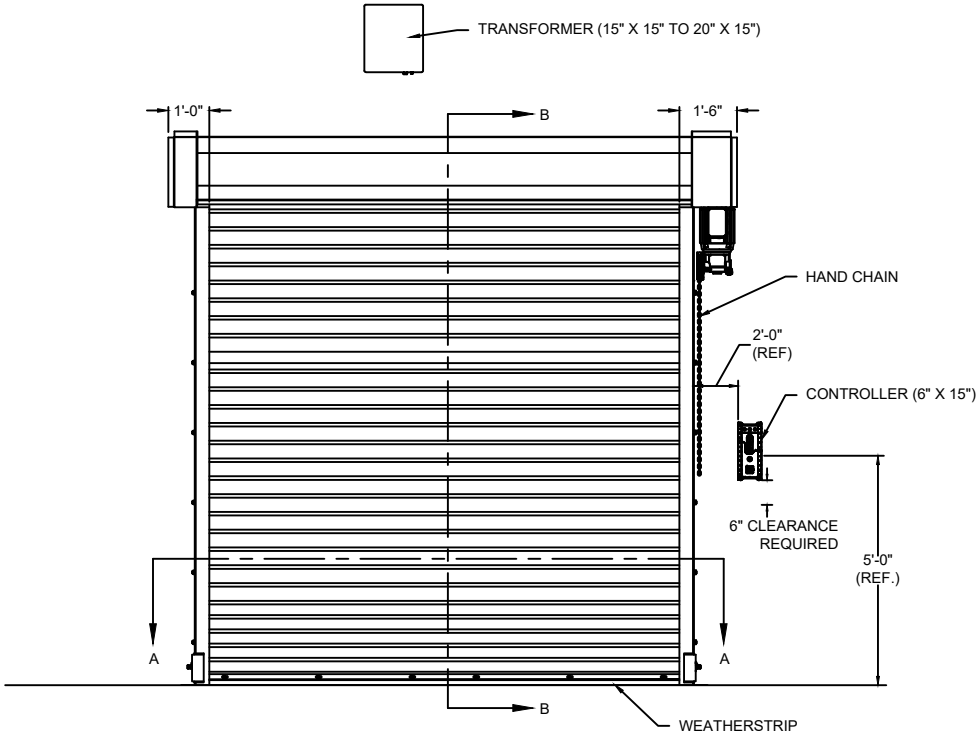

ELEVATION

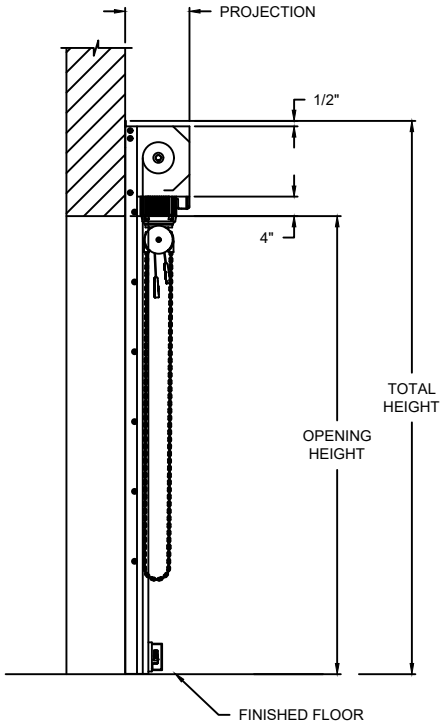

SECTION B-B

PROJECTION	
MIN.	MAX.
12" X 14"	26" X 28"

SECTION A-A

COMPONENT	MATERIAL	OPERATION	NOTES:
HOOD	24 GA. GALVANIZED STEEL	MOTOR RH 460V 3-PHASE 60HZ VIA TRANSFORMER (456-495V RANGE)	1. WINDLOAD 20 P.S.F
CURTAIN	GALVANIZED STEEL		
GUIDES	STEEL ANGLES		
BOTTOM BAR	STEEL ANGLES		

EVERSERVE®

625S HEAVY DUTY STORMTITE™ INSULATED
SPRINGLESS SERVICE DOOR

DWG. NO.	DATE:	The Genuine. The Original.
SHEET	BY:	

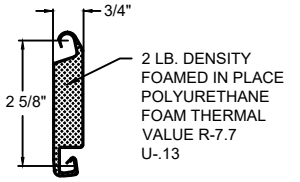

F-265I SLAT DETAIL

OPTIONS	
OPENING WIDTH	
OPENING HEIGHT	
GUIDE OPTIONS	☐ E GUIDE ☐ Z GUIDE
HOOD OPTIONS	☐ INTERIOR OCTOGON ☐ INTERIOR ROUND ☐ INTERIOR SQUARE ☐ EXTERIOR SLOPED

MODEL	STANDARD MAX. VALUES	
	WIDTH	HEIGHT
625S	30'	20'

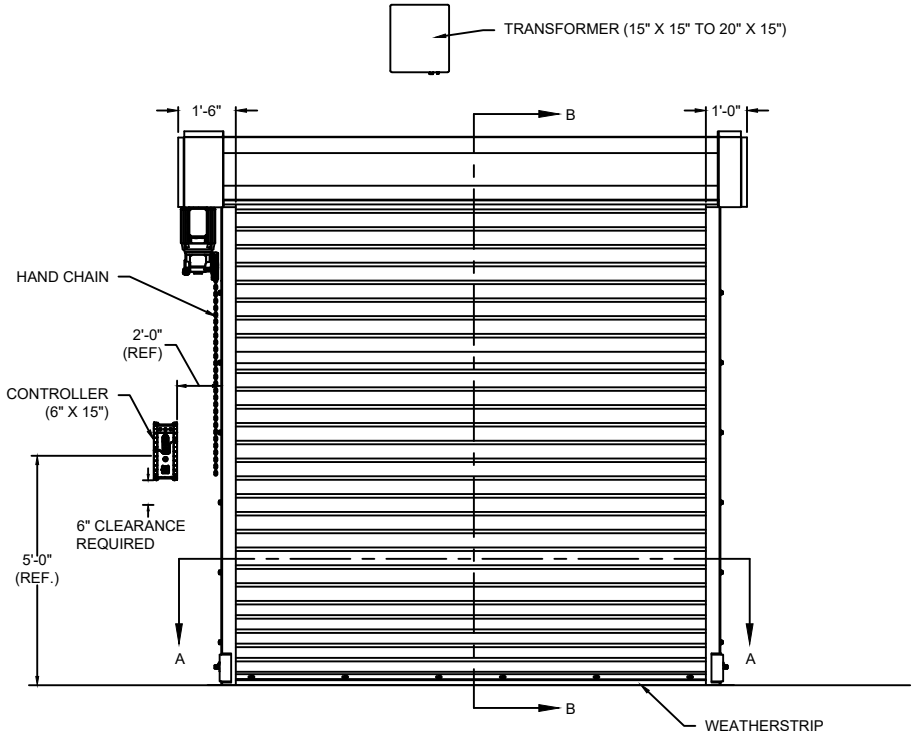

ELEVATION

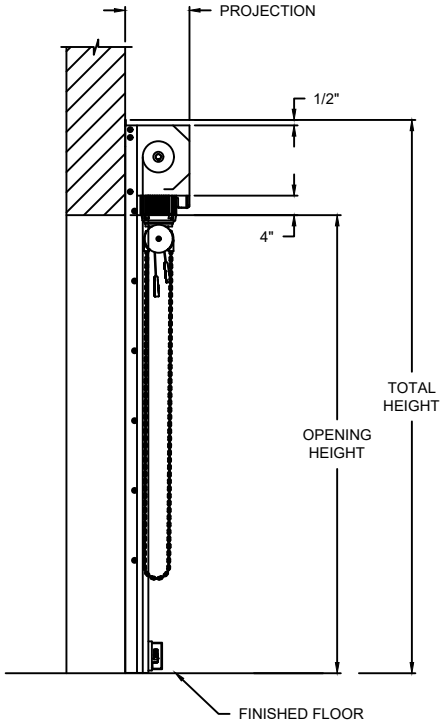

SECTION B-B

PROJECTION	
MIN.	MAX.
12" X 14"	26" X 28"

SECTION A-A

COMPONENT	MATERIAL	OPERATION	NOTES:
HOOD	24 GA. GALVANIZED STEEL	MOTOR LH 460V 3-PHASE 60HZ VIA TRANSFORMER (456-495V RANGE)	1. WINDLOAD 20 P.S.F
CURTAIN	GALVANIZED STEEL		
GUIDES	STEEL ANGLES		
BOTTOM BAR	STEEL ANGLES		

EVERSERVE®

625S HEAVY DUTY STORMTITE™ INSULATED
SPRINGLESS SERVICE DOOR

DWG. NO.	DATE:	The Genuine. The Original.
SHEET	BY:	

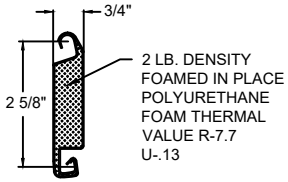

F-265I SLAT DETAIL

OPTIONS	
OPENING WIDTH	
OPENING HEIGHT	
GUIDE OPTIONS	☐ E GUIDE ☐ Z GUIDE
HOOD OPTIONS	☐ INTERIOR OCTOGON ☐ INTERIOR ROUND ☐ INTERIOR SQUARE ☐ EXTERIOR SLOPED

MODEL	STANDARD MAX. VALUES	
	WIDTH	HEIGHT
625S	30'	20'

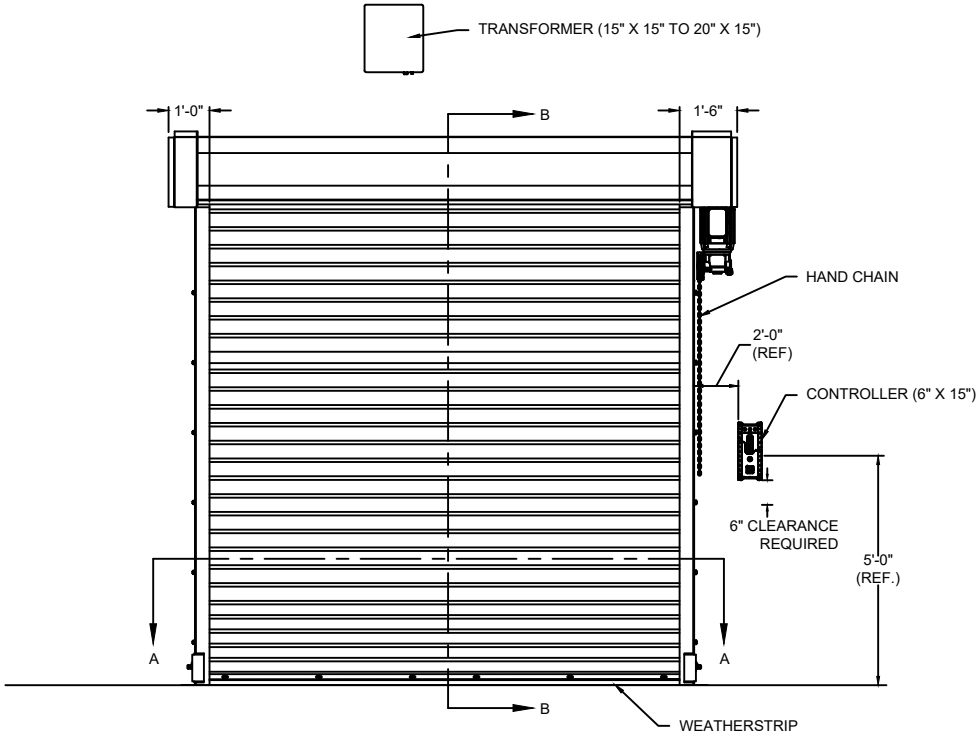

ELEVATION

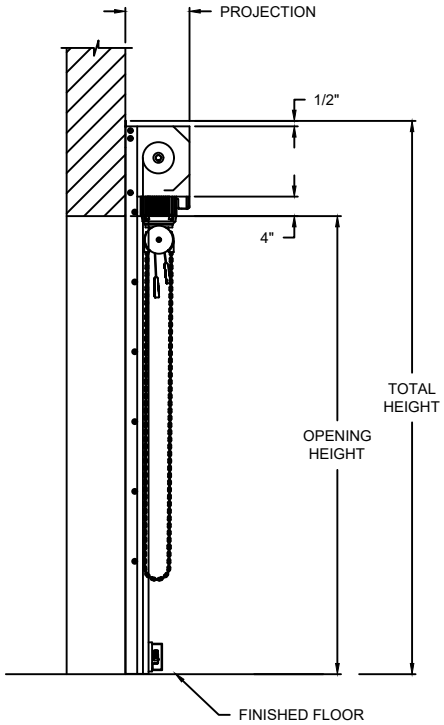

SECTION B-B

PROJECTION	
MIN.	MAX.
12" X 14"	26" X 28"

SECTION A-A

COMPONENT	MATERIAL	OPERATION	NOTES:
HOOD	24 GA. GALVANIZED STEEL	MOTOR RH 575 V 3-PHASE 60HZ	1. WINDLOAD 20 P.S.F
CURTAIN	GALVANIZED STEEL		
GUIDES	STEEL ANGLES		
BOTTOM BAR	STEEL ANGLES		

EVERSERVE®

625S HEAVY DUTY STORMTITE™ INSULATED
SPRINGLESS SERVICE DOOR

DWG. NO.	DATE:	The Genuine. The Original.
SHEET	BY:	

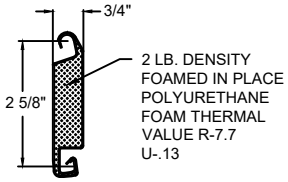

F-265I SLAT DETAIL

OPTIONS	
OPENING WIDTH	
OPENING HEIGHT	
GUIDE OPTIONS	☐ E GUIDE ☐ Z GUIDE
HOOD OPTIONS	☐ INTERIOR OCTOGON ☐ INTERIOR ROUND ☐ INTERIOR SQUARE ☐ EXTERIOR SLOPED

MODEL	STANDARD MAX. VALUES	
	WIDTH	HEIGHT
625S	30'	20'

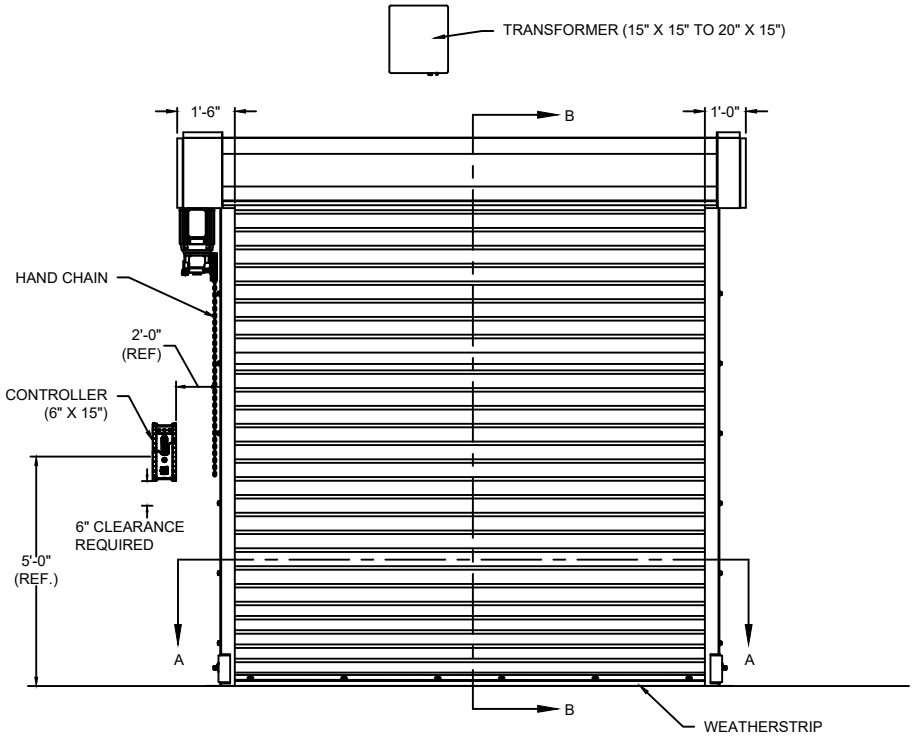

ELEVATION

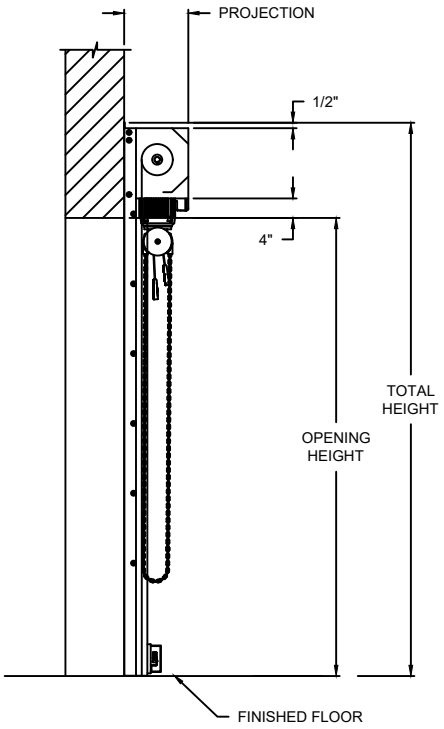

SECTION B-B

PROJECTION	
MIN.	MAX.
12" X 14"	26" X 28"

SECTION A-A

COMPONENT	MATERIAL	OPERATION	NOTES:
HOOD	24 GA. GALVANIZED STEEL	MOTOR LH 575 V 3-PHASE 60HZ	1. WINDLOAD 20 P.S.F
CURTAIN	GALVANIZED STEEL		
GUIDES	STEEL ANGLES		
BOTTOM BAR	STEEL ANGLES		

EVERSERVE®

625S HEAVY DUTY STORMTITE™ INSULATED
SPRINGLESS SERVICE DOOR

DWG. NO.	DATE:	The Genuine. The Original.
SHEET	BY:	